1966

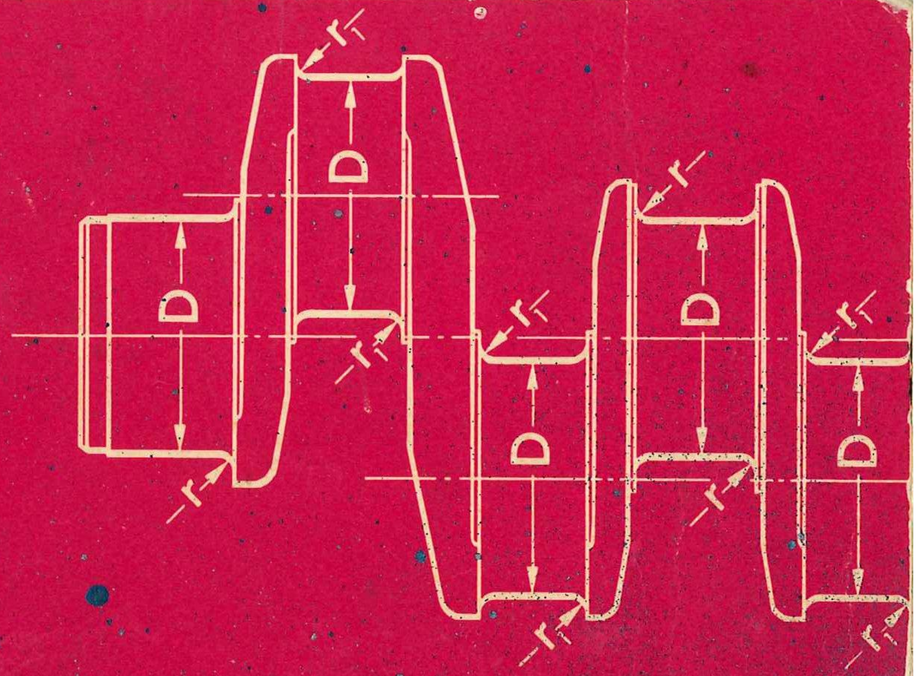

SERVICE

Without Guesswork

TECHNICAL DATA
FOR WORKSHOP USE

All Types, Models and Versions

This booklet contains measurements, clearances and other important details for the complete range of VW products from the introduction of the 30 bhp engine in December 1953. It should be carried by every VW specialist and not just put into a drawer somewhere.

The SAE equivalents of the German bhp figures in this booklet are given on page 5.

VOLKSWAGENWERK AG · WOLFSBURG

Valid for:

a - Vehicles	Output	from Chassis No.	from Date	to Chassis No.	to Date
Standard Sedan	30 bhp	1—0575415	December 1953	6502399	July 1964
Standard Sedan, Sedan A	30 bhp	115—000001	August 1964	115979202	July 1965
1200 A	**34 bhp**	**116000001**	**August 1965**	**continues**	
De Luxe Sedan Karmann Ghia Models VW Convertible	30 bhp	1—0575415	December 1953	3192506	July 1960
	34 bhp	3192507	August 1960	6502399	July 1964
		115000001	August 1964	115979202	July 1965
VW 1300 Sedan Karmann Ghia Models VW Convertible	**40 bhp**	**116000001**	**August 1965**	**continues**	
Transporter 1200	30 bhp	20—069409	December 1953	614455	May 1960
	34 bhp	614456	June 1960	1328271	July 1964
		215000001	August 1964	215036378	September 1964
Transporter 1500	42 bhp	1041014	January 1963	1328271	July 1964
		215000001	August 1964	215176339	July 1965
	44 bhp	**216000001**	**August 1965**	**continues**	
Volkswagen 1500	**45 bhp**	0000001	April 1961	0483592	July 1964
		315000001	August 1964	315220883	July 1965
		316000001	**August 1965**	**continues**	
	54 bhp	0221975	August 1963	0483592	July 1964
		315000001	August 1964	315220883	July 1965
Volkswagen 1600		**316000001**	**August 1965**	**continues**	

b - Industrial Engines	Compression ratio	from		to	
		Engine No.	Date	Engine No.	Date
Type 122/1—1192 cc	6.6 : 1	122—001985	December 1963	122—073000	July 1960
Type 122/2—1192 cc	**7.0 : 1**	**122—073001**	**August 1960**	**continues**	
Type 126 —1493 cc	7.8 : 1	126—007501	May 1962	126—012205	July 1965
Type 126A—1584 cc	**7.7 : 1**	**126—012206**	**August 1965**	**continues**	
Type 124 —1493 cc	7.8 : 1	124—002501	August 1963	124—002835	July 1965
Type 124A—1584 cc	**7.7 : 1**	**124—002836**	**August 1965**	**continues**	

Engine Identification List

Type	Engine		Code letter	Compression ratio	Octane requirement	Standard engine or M-No.	Installed
	DIN bhp	SAE bhp					
1/1200-30 bhp	30	36	A	6.6 : 1	84	Standard	up to July 1965
1/1200	34	41.5	D	7.0 : 1	86	Standard	up to July 1965
1/1200 A	**34**	**41.5**	**D**	**7.0 : 1**	**86**	**Standard**	**from August 1965**
1/1300	**40**	**50**	**F**	**7.3 : 1**	**87**	**Standard**	**from August 1965**
	37	47	E	6.6 : 1	81	M 240[1])	from Nov. 1965
2/1500	42	51	G	7.8 : 1	86	Standard	up to July 1965
	44	**53**	**H**	**7.5 : 1**	**91**	**Standard**	**from August 1965**
	40	49	L	6.6 : 1	83	M 240[1])	from Nov. 1965
3/1500	45	54	K	7.8 : 1	90	Standard	up to July 1965
	45	**54**	**K**	**7.5 : 1**	**90**	**Standard**	**from August 1965**
	41	52	M	6.6 : 1	80	M 240[1])	from Nov. 1965
3/1500 S	52	63.5	N	7.8 : 1	90	M 249[2])	up to July 1965
	54	66	R	8.5 : 1	95	Standard	up to July 1965
3/1600	**54**	**65**	**T**	**7.7 : 1**	**90**	**Standard**	**from August 1965**
	48	59	P	6.6 : 1	78	M 240[1])	from Nov. 1965

[1]) Engines with recessed crown pistons are
[2]) Engines with flat crown pistons were
} only supplied to certain countries

CONTENTS

M

Engine Page

I. Tolerances and wear limits [1]) 8
II. Technical data 26
III. Tables
a - Measurements, weights and markings of cylinders, pistons and piston pins ... 28
b - Regrinding crankshaft 30
c - Tightening cylinder head nuts 36
d - Industrial Engines:
1 - Adjustment of the speed limiter 35
2 - Permissible variations for governor setting 36
3 - Spring table for governor adjustment 38

K

Fuel System

a - Carburetor jets for Vehicle Engines 40
b - Carburetor jets for Industrial Engines 44
c - Fuel pumps 46

V

Front Axle

I. Tolerances and wear limits [1])
a - Type 1 48
b - Type 2 49
c - Type 3 50
II. Technical data and settings
a - Steering 52
b - Torsion bar adjustment 52
c - Stabilizer (Type 3) 53
III. Arrangement of shims (for Type 1 and 2 only) 54
IV. Values for vehicle alignment check 56

[1]) The term „Wear limit" means that parts which are near, or have already reached, the dimensions given should not be fitted again when carrying out repairs.

CONTENTS

H

Rear Axle and Transmission Page

I. Tolerances and wear limits [1]) 62
II. Technical data and settings
a - Ratios 68
b - Torsion bar adjustment 69
c - Tightening transmission case nuts (only Standard- and Partly-Synchronized Transmission) 70
d - Differential adjustment 71

B

Brakes and Wheels

I. Tolerances and wear limits [1]) 76
II. Tire data 88

E

Electrical System

I. Distributor 90
II. Lighting 92
III. Batteries 94

T

General Technical Data

I. Table of types 96
II. Tightening torques 100
III. Dimensions 114
IV. Performance 116
V. Capacities 122
VI. Fuel and oil consumption 123

The figures in heavy type in the various groups facilitate the finding of the newest figures at the time of printing.

All measurements are in mm and (inches).

M K V H B E T

ENGINE

I. Tolerances and wear limits

When considering the wear limits of pistons and cylinders, the oil consumption of the engine must also be taken into account.

Designation	30 bhp and Type 122/1		all other engines[1])	
	On installation (new)	Wear limit	On installation (new)	Wear limit
1 - Cylinder seating depth in cylinder head	12.9—13.0 (.507—.512″)	14.5 (.570″)	13.7—13.8[2]) (.539—.543″)	—
2 - Cylinder ... out of round	0.01 (.0004″)		0.01	
3 - Piston/cylinder ... clearance	0.04—0.05 (.0016—.002″)	0.20 (.008″)	0.04—0.05[3]) (.0016—.002″)	0.20 (.008″)
4 - a - Upper piston ring ... side clearance	0.05—0.07 (.002—.0027″)	0.10 (.004″)	0.07—0.09[4]) (.0027—.0035″)	0.12 (.005″)
b - Lower piston ring ... side clearance	0.05—0.07 (.002—.0027″)	0.10 (.004″)	0.05—0.07 (.002—.0027″)	0.10 (.004″)
5 - Oil scraper ring ... side clearance	0.03—0.05 (.001—.002″)	0.10 (.004″)	0.03—0.05 (.001—.002″)	0.10 (.004″)
6 - Both compression rings ... gap	0.30—0.45 (.012—.018″)	0.90 (.035″)	0.30—0.45	0.90
Oil scraper ring ... gap	0.25—0.40 (.010—.016″)	0.95 (.037″)	0.25—0.40	0.95
7 - Weight difference between pistons in one engine	max. 5 gr.	—	—	max. 10 gr.[5])
8 - Weight difference between connecting rods in one engine	max. 5 gr.	—	max. 5 gr.	max. 10 gr.[5])
9 - Piston pin/bush ... radial clearance	0.01—0.03 (.0004—.001″)	0.05 (.002″)	0.01—0.02 (.0004—.0008″)	0.04 (.0016″)

Remarks

[1]) including modified 30 bhp Transporter engine from May 1959 (Chassis No. 469477 / Engine No. 3400000)

[2]) all 1.5 and 1.6 liter engines: 13.75—13.85 (.541—.545″)

[3]) all 1.5 and 1.6 liter engines: 0.04— 0.06 (.0016—.0023″)

[4]) all 1.5 and 1.6 liter engines: 0.08— 0.11 (.0031—.0043″)

[5]) When repairing

Designation		30 bhp and Type 122/1 On installation (new)	30 bhp and Type 122/1 Wear limit	all other engines[1]) On installation (new)	all other engines[1]) Wear limit
10 - Connecting rod journal/ connecting rod	radial clearance	0.02—0.06 (.0008—.0024″)	0.15 (.006″)	0.02—0.08[6]) (.0008—.003″)	0.15
	side clearance	0.17—0.40 (.0066—.016″)	0.70 (.028″)	0.10—0.40 (.004—.016″)	0.70
11 - Crankshaft/main journal (taking into account housing preload)					
a - Bearings No. 1—4	radial clearance	0.05—0.10 (.002—.004″)	0.19 (.0075″)	—	—
b - Bearings No. 1—3 (from August 1965: bearings 1 and 3)	radial clearance	—	—	**0.04—0.10** (.0016—.004″)	**0.18** (.007″)
up to Engine No. 3520332[1])	radial clearance	—	—	0.04—0.09 (.0016—.0035″)	0.18 (0.007″)
up to Engine No. 3472699[1])	radial clearance	—	—	0.03—0.09 (.001—.0035″)	0.18 (.007″)
Bearing No. 4	radial clearance	—	—	**0.05—0.10** (.002—.004″)	**0.19** (.0075″)
c - Steel-backed bearings 1—3 (for cold countries only)	radial clearance	0.03—0.09 (.001—.0035″)	0.17 (.0066″)		
Steel-backed bearing 2 from August 1965[7])	radial clearance	—	—	**0.03—0.09** (.001—.0035″)	**0.17** (.0066″)
12 - Crankshaft at No. 2 and 4 main journals (No. 1 and 3 journal on V blocks)	run-out		0.03 (.001″)		0.03[8]) (.001″)
13 - Crankshaft/main journal 1	side clearance	0.07—0.12 (.0027—.0047″)	0.15 (.006″)	**0.07—0.13** (.0027—.0051″)	**0.15** (.006″)
up to Engine No. 3491699[1]): Crankshaft/main journal 2	side clearance	—	—	0.06—0.13 (.0024—.0051″)	0.15 (.006″)

Remarks

[6]) all 1.5 and 1.6 liter engines: 0.02—0.07 (.0008—.0027″)

[7]) Valid for:
Type 1: 34 bhp from Engine No. D 0000001
40 bhp from Engine No. F 0000001
Type 2: 44 bhp from Engine No. H 0000001
Type 3: 45 bhp from Engine No. K 0000001
54 bhp from Engine No. T 0000001

[8]) all 1.5 and 1.6 liter engines: 0.02 (.0008″)

Designation		30 bhp and Type 122/1 On installation (new)	30 bhp and Type 122/1 Wear limit	all other engines[1]) On installation (new)	all other engines[1]) Wear limit
14 - Crankshaft	out of balance	max. 8 cmg		max. 8 cmg	
15 - Main bearing journal	out of round		0.03 (.001″)		0.03
16 - Connecting rod journal	out of round		0.03		0.03
17 - Crankcase bore for crankshaft bearings					
a - Bearings No. 1—3	diameter	60.00—60.02 (2.3622—2.3630)	60.03 (2.3633″)	**65.00—65.02** (2.559—2.5598″)	**65.03** (2.5601″)
up to Engine No. 3520332	diameter	—	—	60.00—60.02 (2.3622—2.3630)	60.03 (2.3633″)
b - Bearing No. 4	diameter	50.00—50.03 (1.9685—1.9696)	50.04 (1.9700″)	50.00—50.03	50.04
c - Seat for oil seal	diameter			90.00—90.05 (3.5433—3.5452)	
18 - Crankshaft pulley	radial run-out	max. 0.8 (.030″)		max. 0.8[9]) (.030″)	
	lateral run-out	max. 0.3 (.012″)		max. 0.3[9]) (.012″)	
19 - Crankcase bore for camshaft bearings from August 1965[7])	diameter	—		**27.50—27.52** (1.082—1.083″)	
Crankcase bores for camshaft	diameter	24.02—24.04 (.9456—.9458″)	—	25.02—25.04 (.9850—.9857″)	—
20 - Camshaft/camshaft bearings (taking into account housing preload)	radial clearance	0.02—0.05 (.0008—.002″)	0.12 (.0047″)	0.02—0.05	0.12 (.0047″)
Thrust bearing	axial clearance	0.02—0.07 (.0008—.0027″)	0.10 (.004″)	0.06—0.11 (.0024—.0043″)	0.14 (.0055″)

Remarks

[9]) Does not apply to flat engines

Designation		30 bhp and Type 122/1 On installation (new)	30 bhp and Type 122/1 Wear limit	all other engines[1]) On installation (new)	all other engines[1]) Wear limit	Remarks
up to Engine No. 5067817 and 122—073129	axial clearance	—	—	0.03—0.08 (.001—.003″)	0.10 (.004″)	
Measured at center bearing (between centers)	run-out	0.02 (.0008″)	0.04 (.0016″)	0.02	0.04	
21 - Camshaft gear	lateral run-out	0.10		—		
	backlash	0.00—0.05 (.000—.002″)		0.00—0.05		
22 - Flywheel (measured at center of friction surface)	lateral run-out	max. 0.30 (.012″)		max. 0.30		
At shoulder below gear ring	radial run-out	max. 0.40 (.016″)		—		
	out of balance	max. 5 cmg (.07 oz. in.)		max. 5 cmg		
Shoulder for oil seal	outside dia	59.9—60.1 (2.3582-2.3661″)	59.4 (2.3385″)	69.9—70.1 (2.7519-2.7598″)	69.4 (2.7322″)	
	external depth	min. 12.5 (.491″)		—		
	internal depth	3.22—3.25 (.126—.128″)		—		
For dowel pin holes	wall thickness	6.3—6.7 (.248—.263″)	min. 4.8 (.188″)	—	—	
Reworking for crankcase for diameter of 110.0 mm	wall thickness		min. 4.4 (.173″)		—	
Turning down tooth width			max. 2.0 (.078″)		max. 2.0	
23 - Valve stem: Inlet	diameter	6.96—6.95 (.2739—.2736″)	6.92 (.2724″)	7.95—7.94 (.3130—.3126″)	7.90 (.3110″)	
Exhaust	diameter	6.95—6.94 (.2736—.2732″)	6.92 (.2724″)	7.92—7.91 (.3118—.3114″)	7.87 (.3098″)	

Designation		30 bhp and Type 122/1 On installation (new)	30 bhp and Type 122/1 Wear limit	all other engines[1]) On installation (new)	all other engines[1]) Wear limit
	out-of-round	0.01 (.0004″)		0.01	
24 - Valve head: Inlet	diameter	30.0 (1.18″)		[10])	
Exhaust	diameter	28.0 (1.102″)		[11])	
25 - Valve guide: Inlet	inside dia.	7.01—7.02 (.2759—.2763″)	7.07 (.2782″)	8.00—8.02 (.3150—.3157″)	8.06 (.3173″)
Exhaust	inside dia	7.02—7.04 (.2763—.2771″)	7.08	8.00—8.02	8.06
26 - Valve guide/valve stem:	rock[12])	0.28—0.32 (.011—.012″)	0.80 (.031″)	0.28—0.32	0.80
27 - Valve seat: Inlet	width	1.3—1.6 (.051—.063″)		1.3—1.6	
Exhaust	width	1.7—2.0 (.067—.078″)		1.7—2.0	
Valve head/seat	run-out	0.01 (.0004″)		0.01	0.02 (.0008″)
28 - Valve springs:					
Loaded length 28 mm	load	33.4 ± 1.7 kg (73.5 ± 3.7 lbs)	—	—	—
Loaded length 31 mm	load	—	—	**57.2 ± 4.0 kg** (126 ± 8.8 lbs)	—
Loaded length 33.4 mm	load	—	—	**43.8 ± 3.0 kg**[13]) (96.4 ± 6.6 lbs)	—
Loaded length 34.3 mm	load	—	—	46.3 ± 2.3 kg[14]) (102 ± 5 lbs)	—

Remarks

Engine		[10]) Inlet	[11]) Exhaust
34 bhp and 122		31.5 (1.239″)	30.0 (1.181″)
40 bhp		33.0 (1.299″)	30.0
42 bhp and 126		31.5	30.0
44 bhp		35.5 (1.396″)	32.0 (1.259″)
45 bhp	up to Engine No. 0065745	35.5	31.0 (1.220″)
	from Engine No. 0065746 and 124	35.5	32.0
54 bhp, 124 A and 126 A		35.5	32.0

[12]) measured with locally manufactured tool VW 689/1

[13]) up to Engine No.
42 bhp: 0627578
45 and 54 bhp: 0663330, and
124—002630
126—010167
continues for 34 bhp and 122

[14]) up to Engine No.
34 bhp: 6805938 (Type 2)
6850939 (Type 1)
45 bhp: 0042987 and
122—106638
} up to introduction of progressively coiled valve springs

Designation		30 bhp and Type 122/1 On installation (new)	30 bhp and Type 122/1 Wear limit	all other engines[1]) On installation (new)	all other engines[1]) Wear limit
29 - Valve clearance (up to max. oil temperature of 50°C/122°F):					
Inlet and exhaust	setting	0.10 (.004″)	—	**0.10** (.004″)	—
Inlet	setting	—	—	0.20 (.008″) [15])	—
Exhaust	setting	—	—	0.30 (.012″) [15])	—
30 - Rocker arm	inside dia	15.99—16.02 (.6294—.6306″)	16.04 (.6316″)	18.00—18.02 (.708—.709″)	18.04 (.710″)
Rocker shaft	diameter	15.98—15.97 (.6290—.6286″)	15.96 (.6282″)	17.98—17.97 (.7077—.7073″)	17.95 (.7066″)
31 - Cam follower bore in crankcase	diameter	15.00—15.02 (.5905—.5912″)	15.06 (.5928″)	19.00—19.02 (.7480—.7485″)	19.05 (.7509″)
Cam follower	diameter	14.98—14.97 (.5896—.5892″)	14.96 (.5888″)	18.98—18.96 (.7471—.7463″)	18.93 (.7452″)
32 - Cam follower/guide plate	clearance	—[16])	0.02 (.0008″)	—	—
33 - Compression pressure[17])	pressure	8.5—7.0 atü (120—100 psi)	5.5 atü (78 psi)	—[18])	—[19])
Difference between cylinders		max. 1.0 atü (14 psi)		max. 1.0 atü	
34 - Oilpump: gears/housing with gasket (measured without preload)	axial clearance	0.07—0.18 (.0027—.007″)	0.20 (.008″)	0.07—0.18	0.20
Gears/housing without gasket	axial clearance		0.10 (.004″)		0.10

Remarks

[15]) up to Engine No.
34 bhp: 9205699
42 bhp: 0710799
45 bhp: 0672748
54 bhp: 0672297 as well as
122—141200
124—002630 and
126—010454
or all engines **without** appropriate sticker

[16]) Cam follower should move under own weight with minimum clearance

[17]) Test with throttle open, engine warm, all plugs out, good gauge, engine turned over with starter

Engine		[18])	[19])
34 bhp and 122		9.0—7.0 atü (128—100 psi)	6.0 atü (85 psi)
40 bhp		9.5—7.5 atü (135—106 psi)	6.5 atü (92 psi)
42 bhp and 126		10.0—8.5 atü (142—121 psi)	7.0 atü (100 psi)
44 bhp		10.0—8.0 atü (142—114 psi)	7.0 atü (100 psi)
45 bhp	up to July 1965 and 124	10.0—8.5 atü (142—121 psi)	7.0 atü (100 psi)
	from Aug. 1965	10.0—8.0 atü (142—114 psi)	7.0 atü (100 psi)
54 bhp/1.5 liter		11.0—9.5 atü (156—135 psi)	8.0 atü (114 psi)
54 bhp/1.6 liter, 124 A and 126 A		10.0—8.0 atü (142—114 psi)	7.0 atü (100 psi)

Designation	30 bhp and Type 122/1 On installation (new)	30 bhp and Type 122/1 Wear limit	all other engines[1]) On installation (new)	all other engines[1]) Wear limit
Gears ..... backlash	0.03—0.08 (.001—.003″)	0.15 (.006″)	0.03—0.08	0.15
35 - Oil pressure (at an oil temperature of 70° C)				
a - at 550 rpm ..... pressure	min. 0.5 atü (7 psi)		min. 0.5 atü (7 psi)	
b - at 2500 rpm ..... pressure	min. 2.0 atü (28 psi)		min. 2.0 atü (28 psi)	
36 - Spring for oil pressure relief valve: Spring (free) ..... length	52—53 (2.05—2.08″)	—	—	—
Loaded length 23.6 mm (.928″) ... load	—	—	7.75 kg (17 lbs)	—
37 - Relief valve opens at ..... pressure	0.3—0.6 atü (4.2—8.5 psi)		0.15—0.45 atü (2.1—6.4 psi)	
38 - Distance from fan housing/ upper edge of throttle ring				
a - with engine cold ..... setting	20 (.8″)		20 } [20])	
b - with engine warm ..... setting	25—30 (1—1.2″)		25—30 } [20])	
39 - Thermostat: at 65—70° C[21])				
in water ..... length	min. 46 (1.8″)		min. 46 (1.8″)	

Remarks

[20]) only up to Engine No.
34 bhp: 8785396
42 bhp: 0627578

[21]) 75—80° C up to Engine No.
30 bhp: 3930188
34 bhp: 6120730

Designation		30 bhp	all other vehicle engines[1])	Remarks
Clutch				[22]) for replacements use dark and light **brown** springs
1 - Driven plate	lateral run-out	0.5 (.020″)	0.8 (.031″)	[23]) for 34 bhp engine
2 - Clutch springs				[24]) for replacements use dark and light **blue** springs
Type 1				[25]) for 40 bhp engine (from Engine No. D 0045573 also for 34 bhp engine)
Length loaded 29.4 (1.157″)	load	55—61 kg (121—134 lbs)	55—61 kg	[26]) for modified 30 bhp and 34 bhp up to Engine No. 6908639
Length loaded 28.3 (1.113″)				[27]) for 34 bhp engine from Engine No. 6908640, as well as 42 and 44 bhp engines
from Chassis No. 4683160	load	57—63 kg (125—138 lbs)	57—63 kg [22]) [23])	
from Chassis No. 5661082	load new	58.5—63.5 kg (129—140 lbs)	58.5—63.5 kg [22]) [23])	
	load settled	51—56 kg (112—123 lbs)	51—56 kg [22]) [23])	
from Chassis No. 115318171:				
a - dark **brown** springs	load new	62.5—65.5 kg (138—144 lbs)	62.5—65.5 kg [24]) [23])	
	load settled	55—58 kg (121—128 lbs)	55—58 kg [24]) [23])	
b - light **brown** springs	load new	59.5—62.5 kg (131—138 lbs)	59.5—62.5 kg [24]) [23])	
	load settled	52—55 kg (114—121 lbs)	52—55 kg [24]) [23])	
Length loaded 29.2 (1.148″)				
from Chassis No. 116000002:				
a - dark **blue** springs	load new	—	**62—66 kg** (136—145 lbs) [25])	
	load settled	—	**54.5—58.5 kg** (120—129 lbs) [25])	
b - light **blue** springs	load new	—	**60—64 kg** (132—141 lbs) [25])	
	load settled	—	**52.5—56.5 kg** (116—124 lbs) [25])	
Type 2				
a - 180 mm diameter				
Inner spring	diameter	17.65 (.698″)	17.65 (.698″) [26])	
Length loaded 26.2 mm (1.030″)	load	16—18 kg (35—40 lbs)	18—20 kg (40—44 lbs) [26])	
Outer spring	diameter	25.5 (1.0″)	25.5 (1.0″) [26])	
Length loaded 29.4 mm (1.157″)	load	49—52 kg (108—114 lbs)	50—54 kg (110—120 lbs) [26])	
b - 200 mm diameter				
Spring	diameter	—	**25.5** (1.0″) [27])	
Length loaded 29.2 (1.148″)	load new	—	**44.75—49.25 kg** (98.5—108.5 lbs) [27])	
	load settled	—	**40.05—44.55 kg** (88.3—98 lbs) [27])	

Designation		30 bhp	all other vehicles engines[1])
Type 3:			
a - 180 mm diameter:			
Length loaded 29.2 mm (1.148''):			
Long spring	load	—	44.5—49.5 kg (98—109 lbs) [28])
Short spring	load	—	39.2—42.8 kg (86—94 lbs)
b - 200 mm diameter: [29])			
Length loaded 29.2 mm (1.148'')	load new	—	**44.75—49.25 kg** (98.5—108.5 lbs) [30])
	load settled	—	**40.05—44.55 kg** (88.3—98 lbs)
3 - Free play at pedal	play	10—20 (.4—.8'')	10—20 (.4—.8'')
4 - Clutch pressure plate	run-out	max. 0.10 (.004'')	max. 0.10 (.004'')
5 - Release plate	run-out	0.30 (.012'')	0.40 (.016'')[31])
6 - Complete clutch	unbalance	max. 15 cmg	max. 15 cmg
7 - Flywheel/release plate	distance	26.8—27.2 (1.054—1.070'')	26.8—27.2[32]) [33])
8 - Total clutch pressure			
Type 1	pressure	300—325 kg (661—716 lbs)	300—325 kg (661—716 lbs [23])
from Chassis No. 4464037	pressure	315—340 kg (694—749 lbs)	315—340 kg (694—749 lbs)
from Chassis No. 5661082	pressure	315—350 kg (694—772 lbs)	315—350 kg (694—772 lbs)
from Chassis No. 115318171	pressure	320—345 kg (705—760 lbs)	320—345 kg (705—760 lbs)
from Chassis No. 116000002	pressure	—	**345—370 kg** (760—815 lbs)[25])
Type 2	pressure	390—420 kg (860—926 lbs)	390—420 kg (860—926 lbs)[26])
from Chassis No. 971532	pressure	—	**380—420 kg** (838—926 lbs)[27])
Type 3	pressure	—	390—420 kg (860—926 lbs)
from Chassis No. 0064916	pressure	—	**380—420 kg** (838—926 lbs)[34])
Automatic clutch (Saxomat) for Type 1 only			
1 - Driven plate	run-out	—	max. 0.8 (.030'') [23])
2 - Linings	outside diam.	—	160 ± 1.0 (6.3 ± .040'')
	inside diameter	—	110 ± 1.0 (4.3 ± .040'')
	thickness	—	2.75 ± 1.0 (.107 ± .040'')
3 - Clutch springs:			
Outer spring, length loaded 21.5 (.845'')	load	—	26—28 kg (57—62 lbs)
Inner spring, length loaded 19.5 (.767'')	load	—	11—12 kg (24—26 lbs)
4 - Shift lever	contact gap	—	0.25 (.010'')

Remarks

[28]) for 45 bhp up to Engine No. 0066739

[29]) Not valid for diaphragm spring clutch

[30]) for 45 bhp from Engine No. 0066740 and 54 bhp

[31]) for 40 bhp and diaphragm spring clutch: 0.30 (.012'')

[32]) for 45 bhp up to Engine No. 0066739: 25.8—26.2/1.015—1.030'' (180 mm diameter clutch)

[33]) for diaphragm spring clutch: 29.7—30.3 (1.168—1.192'')

[34]) Also valid for diaphragm spring clutch from Engine No. 0972001

II. Technical Data

Vehicle engines	1.2 liter		1.3 liter	1.5 liter				1.6 liter	
	30 bhp	34 bhp	40 bhp	42 bhp	44 bhp	45 bhp	54 bhp		
Bore ..... mm (inch)	77 (3.031)	77	77	83 (3.27)	83	83	83	85.5 (3.365)	
Stroke ..... mm (inch)	64 (2.520)	64	69 (2.720)	69	69	69	69	69	
Capacity ..... cc (cu in)	1192 (72.74)	1192	1285 (78.41)	1493 (91.10)	1493	1493	1493	1584 (96.6)	
Capacity of one combustion chamber cc	45.7—47.0	43.0—45.0	43.0—46.0	48.0—50.0	48.0—50.0	48.0—50.0	48.0—50.0	48.0—50.0	
Compression ratio	6.6 : 1	7.0 : 1	7.3 : 1	7.8 : 1	7.5 : 1	7.5 : 1[1])	8.5 : 1	7.7 : 1	
Maximum continuous output (DIN) ..... bhp	30/3400	34/3600	40/4000	42/3800	44/4000	45/3800	54/4200	54/4000	
(SAE) ..... bhp	36/3700	41.5/3900	50/4600	51/4000	53/4200	54/4200	66/4800	65/4600	
Maximum torque (DIN) ..... mkg	7.7[2])/2000	8.4/2000	8.9/2000	9.7/2200	10.4/2000	10.8/2000	10.8/2400	11.2/2200	
(SAE) ..... ft. lbs	60[3])/2400	65/2400	69/2600	74/2600	78/2600	83/2800	83/3000	87/2800	
Dry weight ..... kg (lbs)	90 (198)[4])	108 (237)	111 (244)	110 (242)	112.5 (248)	122 (268)	123 (271)	126 (277)	
Cooling fan capacity ..... liters (cu. ft.) sec.	approx. 500 (18)	530 (19)	556 (20)	550 (20)	575 (21)	565 (20)	580 (21)	565 (20)	
at rpm	3300	3800	4000	3800	4000	4000	3800	4000	
Industrial engines (with following deviations)	122/1	122/2	—	126	—	124	—	126 A	124 A
Output with 8% governor accuracy ..... bhp	27/3000	29/3000	—	38/3000	—	40/3000	—	39/3000	39/3000
Output with 5% governor accuracy ..... bhp	25/3000	27.5/3000	—	35/3000	—	—	—	36.5/3000	—
Output without governor ..... bhp	28/3000	31/3000	—	40/3000	—	on request	—	42/3000	42.5/3000
Dry weight of standard engine ..... kg (lbs)	85 (187)	94 (207)	—	100 (220)	—	107 (235)	—	100	107

Remarks

[1]) up to Engine No. 0065745: 7.2 : 1
up to Engine No. 1029303: 7.8 : 1

[2]) modified 30 bhp Transporter engine from May 1959: 8.0 mkg

[3]) Engine as at[2]): 62.5 ft lbs (SAE)

[4]) Engine as at[2]): approx: 100 kg (220 lbs)

[5]) On engines with fresh air heating without warm air requirement

III. Tables

a - Dimensions, weights and markings of cylinders, pistons and piston pins

Dimensions and markings of **cylinders and pistons**	Color	1.2 and 1.3 liter engines			1.5 liter engines			1.6 liter engines		
		Nominal size	Cylinder dia. (mm)	Matching piston dia. (mm)	Nominal size	Cylinder dia. (mm)	Matching piston dia. (mm)	Nominal size	Cylinder dia. (mm)	Matching piston dia. (mm)
Standard size	blue	77.0 mm dia.	76.99	76.95	83.0 mm dia.	82.99	82.95	85.5	85.49	85.45
	pink		77.00	76.96		83.00	82.96		85.50	85.46
	green		77.01	76.97		83.01	82.97		85.51	85.47
1st Oversize	blue	77.5 mm dia.	77.49	77.45	83.5 mm dia.	83.49	83.45	86.0	85.99	85.95
	pink		77.50	77.46		83.50	83.46		86.00	85.96
	green		77.51	77.47		83.51	83.47		86.01	85.97
2nd Oversize	blue	78.0 mm dia.	77.99	77.95	84.0 mm dia.	83.99	83.95	86.5	86.49	86.45
	pink		78.00	77.96		84.00	83.96		86.50	86.46
	green		78.01	77.97		84.01	83.97		86.51	86.47

Dimensions and markings of **piston pins**	Color	1.2 liter engines		all other engines	
		Piston pin dia. (mm)	Piston pin bore dia. (mm)	Piston pin dia. (mm)	Piston pin bore dia. (mm)
	black	19.994—19.997	19.996—19.999	21.994—21.997	21.995—21.998
	white	19.997—20.000	19.999—20.001	21.997—22.000	21.998—22.001
	green	20.001—20.004	pin only	22.001—22.004	pin only

Weight grading of pistons	Paint line	30 bhp and 122/1		**34 bhp** and **122/2**	**40 bhp**	45 bhp up to Engine No. 0065745	45 bhp from Engine No. 0065746, 42 bhp, Type 126 and 124	**45 bhp** from Engine No. K 0000001 and **44 bhp**	**54 bhp**	
		recessed crown	flat crown						**1.5 liter**	**1.6 liter, Type 126A and 124A**
Weight —	brown	265—270 g	275—280 g		300—308 g	355—360 g	365.0—372.5 g	370—376.5 g	373.5—380.0 g	390—398 g
Weight +	grey	270—275 g	280—285 g		308—316 g	360—365 g	372.5—380.0 g	376.5—383 g	380.0—386.5 g	398—406 g

b - Regrinding Crankshaft

1 - 30 bhp and 122/1 (Not valid for Transporter Engine from May 1959)

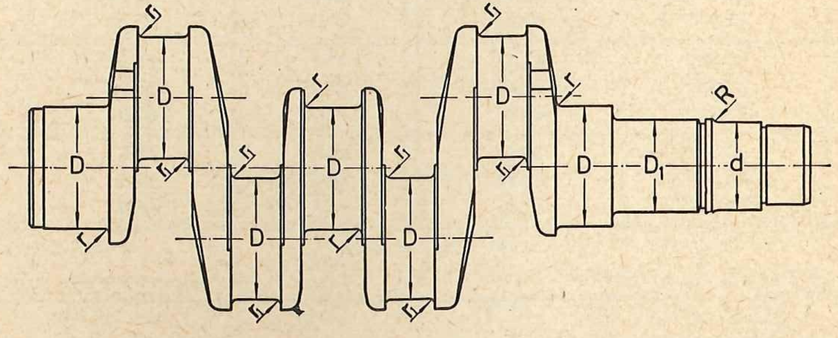

$D_1 = \frac{42.006}{41.995}$ mm dia. $\frac{1.6538''}{1.6533''}$ $R = \frac{4.0}{3.5}$ mm $\frac{0.16''}{0.14''}$ $r = \frac{2.0}{1.5}$ mm $\frac{0.08''}{0.06''}$

	Main bearing journals 1—3 and connecting rod journals (D)			Main bearing journal 4 (d)		
	Nominal dia. mm (ins.)	Ground dia. mm (ins.)	Lapped dia. mm (ins.)	Nominal dia. mm (ins.)	Ground dia. mm (ins.)	Lapped dia. mm (ins.)
Standard	50.00 (1.9685″)	—	49.991 (1.9681″) 49.975 (1.9675″)	40.00 (1.5748″)	—	40.000 (1.5748″) 39.984 (1.5742″)
1st Undersize	49.75 (1.9586″)	49.750 (1.9586″) 49.741 (1.9583″)	49.741 (1.9583″) 49.725 (1.9577″)	39.75 (1.5650″)	39.760 (1.5653″) 39.750 (1.5650″)	39.750 (1.5650″) 39.734 (1.5643″)
2nd Undersize	49.500 (1.9488″)	49.50 (1.9488″) 49.491 (1.9484″)	49.491 (1.9484″) 49.475 (1.9478″)	39.50 (1.5551″)	39.510 (1.5555″) 39.500 (1.5551″)	39.500 (1.5551″) 39.484 (1.5545″)
3rd Undersize	49.25 (1.9390″)	49.250 (1.9390″) 49.241 (1.9386″)	49.241 (1.9386″) 49.225 (1.9380″)	39.25 (1.5453″)	39.260 (1.5457″) 39.250 (1.5453″)	39.250 (1.5453″) 39.234 (1.5446″)
	The lapped diameter is the final dimension and must be accurate					

2 - All other engines

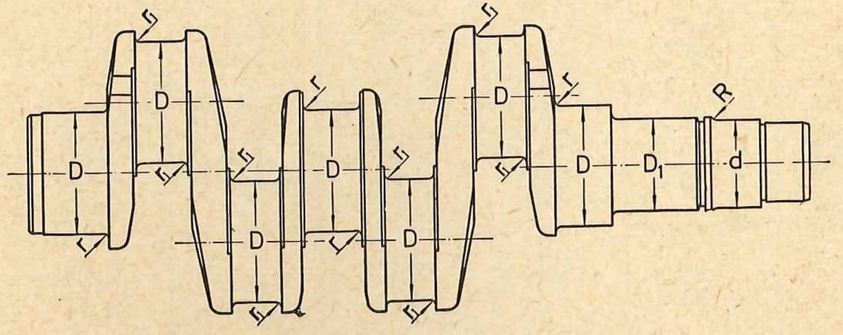

$D_1 = \frac{42.006}{41.995}$ mm dia. $\frac{1.6538''}{1.6533''}$ $\quad R = \frac{4.0}{3.5}$ mm $\frac{0.16''}{0.14''}$ $\quad r = \frac{2.0}{1.5}$ mm $\frac{0.08''}{0.06''}$

$r_1 = \frac{3.0}{2.5}$ mm $\frac{0.12''}{0.10''}$

	Main bearing journals 1—3 and connecting rod journals (D)			Main bearing journal 4 (d)		
	Nominal dia. mm (ins.)	Ground dia. mm (ins.)	Lapped dia. mm (ins.)	Nominal dia. mm (ins.)	Ground dia. mm (ins.)	Lapped dia. mm (ins.)
Standard	55.00 (2.1653″)	— —	54.990 (2.1648″) 54.971 (2.1642″)	40.00 (1.5748″)	— —	40.000 (1.5748″) 39.984 (1.5742″)
1st Undersize	54.75 (2.1555″)	54.749 (2.1555″) 54.740 (2.1551″)	54.740 (2.1551″) 54.721 (2.1544″)	39.75 (1.5650″)	39.760 (1.5653″) 39.750 (1.5649″)	39.750 (1.5650″) 39.734 (1.5643″)
2nd Undersize	54.50 (2.1457″)	54.499 (2.1456″) 54.490 (2.1453″)	54.490 (2.1453″) 54.471 (2.1445″)	39.50 (1.5551″)	39.510 (1.5555″) 39.500 (1.5551″)	39.500 (1.5551″) 39.484 (1.5545″)
For 1.3, 1.5 and 1.6 liter engines only						
3rd Undersize	54.25 (2.1358″)	54.249 (2.1358″) 54.240 (2.1354″)	54.240 (2.1353″) 54.221 (2.1347″)	39.25 (1.5453″)	39.260 (1.5457″) 39.250 (1.5452″)	39.250 (1.5452″) 39.234 (1.5446″)
	The lapped diameter is the final dimension and must be accurate					

c - Tightening cylinder head nuts

1 - Tighten nuts slightly first

2 - Tighten to **1 mkg (7 ft lbs)** in the following order:

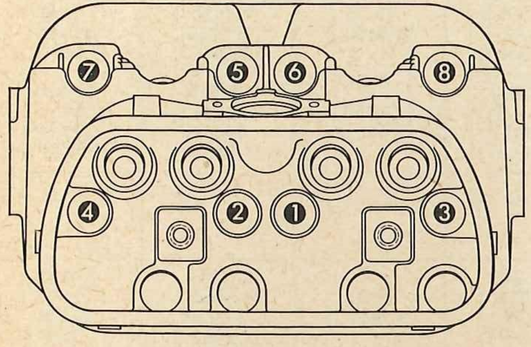

3 - Fully tighten to the following torques

a - 30 bhp engines and Type 122/1: 3.6—3.8 mkg (26.0—27.4 ft lbs)

b - All other engines: **3.2 mkg (23 ft lbs)**

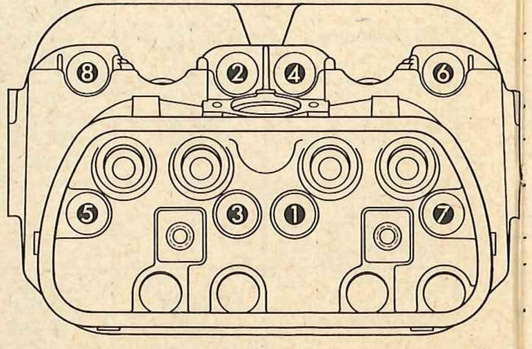

d - Industrial Engines

1 - Adjustment of Speed Limiter in magneto (Type 122, 126 and 126 A)

Identification Figure	9	10	11	12	13	14	15	16	17	18	19 or 19.5
Speed limiter cuts out ignition (rpm.)	(only Type 122) 1800	2000	2200	2400	2600	2800	3000	3200	3400	3600	3800 or 3900

2 - Permissible variations for the normal governor settings:

Type 122/1 (1192 cc)

Nominal speed of governor rpm.	Nominal output of engine bhp.	Nominal output of engine at rpm.	Permissible rpm. with engine not loaded
Output with + 8% governor variation (26 VFIS carburetor)			
1500	13.5	1500	1590
1500	13.5	1500	1575 with hydraulic
1800	16.5	1800	1910 damper
1800	16.5	1800	1890 with hydraulic
2000	18.5	2000	2100 damper
2500	22	2500	2625
2650	22	2610	2650
2800	23.5	2800	2940
3000	25	3000	3180
3428	25	3428	3628
3600	25	3600	3815

From April 1958

1 - Engines with governor with 27 bhp at 3000 rpm.

2 - Engines with accurate governors (5%) only up to 25 bhp.

3 - Engines without governor with 28 bhp at 3000 rpm.

Type 122/2

Nominal speed of governor rpm.	Nominal output of engine bhp.	Nominal output of engine at rpm.	Permissible rpm. with engine not loaded
Output with + 8% governor variation (26 VFIS carburetor)			
1500	13.5	1500	1620
1800	17.5	1800	1940
2000	20.0	2000	2160
2100	21.0	2100	2270
2200	22.0	2200	2375
2300	23.0	2300	2480
2500	25.0	2500	2700
2800	26.5	2800	3020
2900	28.0	2900	3130
3000	29.0	3000	3240
3200	29.5	3200	3460
3400	30.0	3400	3670
3600	30.0	3600	3880
Output with + 5% governor variation (26 VFIS carburetor)			
2000	19.5	2000	2100
2500	24.0	2500	2625
2800	26.5	2800	2940
2900	27.5	2900	3045
3000	27.5	3000	3150 M 806
3200	28.5	3200	3360
3400	29.0	3400	3570
3600	29.0	3600	3780

Type 126

Nominal speed of governor rpm.	Nominal output of engine bhp.	Nominal output of engine at rpm.	Permissible rpm. with engine not loaded
Output with +8% governor accuracy (28 VFIS carburetor)			
2500	32.5	2500	2700
2800	36.0	2800	3020
3000	38.0	3000	3240
3200	39.0	3200	3460
3400	41.0	3400	3670
3600	42.0	3600	3880
Output with +5% governor accuracy (26 VFIS carburetor) M 906			
2000	24.5	2000	2100
2500	29.0	2500	2625
3000	35.0	3000	3150
3600	39.0	3600	3780

Type 126 A

Nominal speed of governor rpm.	Nominal output of engine bhp.	Nominal output of engine at rpm.	Permissible rpm. with engine not loaded
Output with + 8% governor accuracy (28 VFIS carburetor)			
2000	28.0	2000	2160
2200	30.0	2200	2375
2300	31.5	2300	2480
2500	34.0	2500	2700
2800	34.0	2800	3020
3000	37.5	3000	3240
3200	41.0	3200	3460
3400	43.0	3400	3670
3600	44.0	3600	3880

Type 126 A

Nominal speed of governor rpm.	Nominal output of engine bhp.	Nominal output of engine at rpm.	Permissible rpm. with engine not loaded
Output with + 5% governor accuracy (26 VFIS carburetor) M 906			
2000	24.5	2000	2100
2100	25.5	2100	2205
2500	30.5	2500	2625
3000	36.5	3000	3150
3600	41.0	3600	3780
Type 124 Standard version			
Output with + 8% governor accuracy (28 VFIS carburetor)			
2000	28.0	2000	2160
2500	34.5	2500	2700
3000	40.0	3000	3240
3200	42.0	3200	3455
3400	44.0	3400	3670
3600	46.0	3600	3860
Type 124 A Standard Version			
Output with + 8% governor accuracy (28 VFIS carburetor)			
2000	27.0	2000	2160
2500	34.0	2500	2700
3000	39.5	3000	3240
3200	42.0	3200	3455
3400	44.0	3400	3670
3600	44.5	3600	3860

3 - Spring table for governor adjustment
(one axial spring is used for all settings)

Designation of governor (Part No.) for				Nominal engine speed	Radial springs per side	Dimension "a" [1] mm	Governor speed, measured at a regulating pin stroke of		I set of governor springs Part No.	Remarks
122/1	122/2	126 and 126 A	124 and 124A				1 mm	5 mm		
122135015	—	—	—	1500	1	68.2	1500	1725	SP 250	[1]) Measurement "a" is taken across outer surfaces of spring nuts. (For further details see Industrial Engine Workshop Manual and special publications)
122135015 A[2])	122135015 B[2])	—	—	1500	2	65.0	3500	4000	SP 250 A	
122135016	122135016 C	—	—	1600	1	66.5	1600	1805	SP 250	
122135018	122135018 C	—	—	1800	2	70.5	1800	2000	SP 252	[2]) Ratio crankshaft pulley/friction wheel. 1 : 2.33
122135020	122135020 C	122135020 C	124135020	2000	1	69.0	2000	2220	SP 254[3])	
—	122135021 C	122135021 C	—	2100	2	68.5	2100	2310	—	[3]) Do not use the two springs with outside diameter of approx. 15 mm
122135022	122135022 C	—	—	2200	2	67.5	2200	2410	—	
122135023	122135023 C	122135023 C	—	2300	2	69.0	2300	2505	SP 259	[4]) M 806
122135024	122135024 C	—	—	2400	2	66.5	2400	2600	SP 254	
122135025	122135025 C	122135025 C	—	2500	2	65.5	2500	2690	SP 254	
122135041	—	—	—	2650	2	68.0	2650	2850	SP 255	
—	122135041 C	—	—	2650	2	64.5	2650	2810	SP 255 A	
122135028	122135028 C	122135028 C	—	2800	2	68.0	2800	3020	SP 256	
—	122135029 C	—	—	2900	1	65.0	2900	3120	—	
122135030	122135030 E[4])	122135030 E[4])	—	3000	2	67.0	3000	3220	SP 257	
—	122135030 D	122135030 D	124135030	3000	2	70.0	3000	3220	SP 257 A	
122135032	122135032 C	122135032 C	124135032	3200	2	70.5	3200	3495	SP 261	
122135033	122135033 C	—	—	3300	2	68.5	3300	3565	—	
122135034	122135034 C	122135034 C	—	3400	2	67.5	3400	3680	SP 258	
—	—	—	124135034	3400	2	70.0	3400	3645	SP 260	
122135036	122135036 C	122135036 C	124135036	3600	2	65.8	3600	3870	SP 258	
122135043[2])	122135043 B[2])	—	—	1500—1800	2	68.0	3500—4150	3990—4550	—	Adjustable governor
122135043 A	122135043 D	122135043 D	—	3000—3600	2	68.5	3000—3550	3250—3800	SP 262	Adjustable governor

FUEL SYSTEM

a - Carburetor jets for vehicle engines

Type 1 and 2 from 21. Dec. 1953								
Engine bhp	30			34	42	40	44	Remarks
Engine Compression ratio	6.1 : 1	6.6 : 1		7.0 : 1	7.8 : 1	7.3 : 1	7.5 : 1	
Carburetor type	28 PCI			28 PICT and 28 PICT-1 28 PICT-2[4])		30 PICT-1		
up to Engine No.	849904	3919979[1]) 991589[2])	3919979[3]) 3538143[2])	—	—	—	—	
from Engine No.	—	—	—	5000001	0143543[2])	F 0000001	H 000001	
Venturi mm dia.	21.5	21.5	21.5	22.5	22.5	24.0	24.0	
Main jet	122.5	117.5	117.5	122.5	115	125	115	
Air correction jet	200	195	180	130 y [5])	145 y or 150 z	125 z[6])	135 z	
Pilot jet	g 50	g 50	g 50	g 55	g 45[7])	g 55[7])	g 60[7])	
Pilot jet air bleed mm dia.	0.8	0.8	0.8	2.0	1.55	150	150	
Fuel jet for pump	50	50	50	0.5	0.5	50	50	
Air correction jet for pump	2.0	2.0	2.0	—	—	—	—	
Power fuel jet mm dia	—	—	—	1.0	0.7	—[8])	75	
Emulsion tube	29	29	29	Fixed to air correction jet				
Emulsion tube carrier mm dia.	5.0	5.0	5.0	—	—	—	—	
Float needle valve mm dia.	1.5	1.5	1.5	1.5	1.5	1.5	1.5	
Float weight grams	5.7	5.7	5.7	5.7	5.7	5.7	5.7	
Accelerator pump capacity cc/stroke	0.4—0.6	0.4—0.6	0.4—0.6	1.1—1.4[9])	1.1—1.4[10])	1.3—1.6[11])	1.3—1.6[11])	

[1]) Type 11 and 15, for Standard and Model A Sedans up to Chassis No. 115979202

[2]) Type 2

[3]) Type 14

[4]) for engines with progressive accelerator linkage

[5]) Type 2 and 14: 145y

[6]) Type 14: 170 z

[7]) with electro-magnetic cut-off valve

[8]) Type 14: 75

[9]) up to Engine No. 7350400 (Type 1) and 7777337 (Type 2): 0.8 to 1.0

[10]) up to June 1963: 1.2 to 1.3

[11]) Cotter pin in inner position

K

Engine	3/Single-carburetor Engine				3/Twin-carburetor Engine		
Carburetor Type	32 PHN	32 PHN—1			1.5 liter 32 PDSIT—2/—3[1])		1.6 liter
Part No.	311 129 025/B[2])	311 129 025 A[2])	311 129 025 D[3])		341 129 025/026[1])	341 129 025 A/026 A[1])	341 129 025 B/026 B[1])
Identification marks for 6 Volt	—	—	VW 1—1 } [4])	VW 1—3	VW 5—1 or —2 / VW 6—2 or —3	VW 26—1 or —2 / VW 27—1 or —2	VW 40—1 or —2 / VW 41—1 or —2
Identification marks for 12 Volt	—	—	VW 2—1 } [4])	VW 2—3	VW 24—1 or —2 / VW 25—1 or —2	VW 35—1 or —2 / VW 36—1 or —2	VW 42—1 or —2 / VW 43—1 or —2
from Engine No.	0000001	0084752	0220137	0319841	0255001	0633331	T 000001
Venturi mm dia.	23.5	23.5	23.5	23.5	21.5	23	23
Main jet	137.5	132.5	127.5	130.0	X 125	X 135	X 130
Air correction jet	125	115	115	115	180	180	240
Pilot jet	g 45[5])[6])	g 45[5])	g 45[5])	g 50[5])	g 45	g 45	g 45[5])
Injector tube for pump mm dia.	0.8	0.8	0.8	0.7	0.5[7])	0.5[8])	50[7])
Power fuel jet mm dia.	1.05	0.7	0.7	0.7	0.9[9])	0.8[10])	80[8])
Emulsion tube	48	48	48	48	—	—	—
Float needle valve mm dia.	1.5	1.5	1.5	1.5	1.2[11])	1.2[11])[12])	1.2[11])[12])
Float weight grams	12.5	12.5	12.5	12.5	7.3	7.3	7.3
Accelerator pump capacity cc/stroke	0.9—1.2[13])	0.9—1.2	0.9—1.2	0.8—1.0[14])	0.35—0.55	0.35—0.55	0.35—0.55[15])
Throttle valve gap mm	0.8—0.9	0.8—0.9	0.8—0.9	0.8—0.9	0.60—0.65	0.60—0.65	0.60—0.65

Remarks

[1]) Left/right (left carburetor with vacuum connection for distributor)
[2]) As replacement: 311 129 025 D (VW 1—3)
[3]) Also for Type 124 without governor (Carburetor 32 PHN-1 for Type 124 A is on page 45)
[4]) From Carburetor No. 238 255, identification marks as follows due to re-routing of vacuum drilling: VW 1—2 (6 Volt)
VW 2—2 (12 Volt)
[5]) With electro-magnetic cut-off valve
[6]) Approx. from Engine No. 0013600 to 0014474: g 50
Distance from center of tube to carburetor body
[7]) 12.0 mm [8]) 15.0 mm
[9]) 9.5 mm [10]) 10.5 mm
[11]) With damping ball
[12]) Gasket 1.5 mm thick
[13]) On 311 129 025 B: 1.2—1.5
[14]) Adjustable
[15]) Cotter pin in center position

K

b - Carburetor jets for industrial engines

Engine Type	Only 122/1 (to July 1954)	122/1 and **122/2**		122/1 (up to July 1954)	122/1 **122/2**
Carburetor Type	26 VFIS			28 PCI	
Part No.	—[1])	—[1])	122129021 D	111129023[2]) (up to July 1954)	113129023 A[2])
Governor accuracy	—	8 %	8 %[4])	without governor	
Speed range in rpm	—	1500[5])	1800—3600		
Venturi mm dia.	19.0	18.0	20.0	21.5	21.5
Main jet	100	95	100	122.5	117.5
Air correction jet	190	190	160[6])	200	195[7])
Pilot jet	g 45	g 45	g 45	g 50	g 50
Pilot jet air bleed mm dia.	1.0	1.0	1.0	0.8	0.8
Fuel jet for pump	—	—	—	50	0.5
Air correction jet for pump	—	—	—	2.0	2.0
Emulsion tube	0	10	10	29	29
Emulsion tube carrier mm dia.	5.3	5.3	5.3	5.0	5.0
Float needle valve mm dia.	1.5	1.5	1.5	1.5	1.5
Float weight grams	12.5	12.5[10])	12.5[10])	5.7	5.7
Accelerator pump capacity cc/stroke	—	—	—	0.4—0.6	0.4—0.6
Throttle valve gap mm	—	—	—	—	—

Engine Type	126 and **126 A**		126	**126 A**	124	**124 A**		Remarks
Carburetor Type	26 VFIS	28 VFIS	32 PCI		28 VFIS		32 PHN-1	
Part No.	126129021 A	126129021	126129021 B	126129021 C	124129021 B	124129021 C	124129025[3])	
Governor accuracy	5%	8%	without governor		8%		without governor	
Speed range in rpm	—	—						
Venturi mm dia.	21.0	22.0	24.0	24.0	22.0	22.0	23.5	
Main jet	105	107.5	120	120	107.5	110	130	
Air correction jet	160	150	110	120	140	160	105	
Pilot jet	g 45[8])	g 45[8])	g 45[8])	g 45[8])	g 45[9])	g 45[9])	g 50[9])	
Pilot jet air bleed mm dia.	1.7	1.3	1.7	1.7	0.8	0.8	1.4	
Fuel jet for pump	—	—	0.5	0.5	—	—	0.7	
Air correction jet for pump	—	—	2.0	2.0	—	—	—	
Emulsion tube	10	10	28	28	23	23	48	
Emulsion tube carrier mm dia.	5.3	5.5	5.3	5.3	5.3	5.3	—	
Float needle valve mm dia.	1.5	1.5	1.5	1.5	1.5	1.5	1.5	
Float weight grams	5.7	5.7	5.7	5.7	5.7	5.7	12.5	
Accelerator pump capacity cc/stroke	—	—	0.9—1.1	0.9—1.1	—	—	0.8—1.0[11])	
Throttle valve gap mm	—	—	—	—	—	—	0.8—0.9	

[1]) Only 122129021D as replacement (change jets over)

[2]) Plug vacuum connection with N1308D1

[3]) 311129025D only as replacement. Convert air correction jet.

[4]) Also with 5% after altering throttle valve setting

[5]) Ratio between crankshaft pulley and friction pulley 1 : 2.33

[6]) On Type 122/2 : 170

[7]) With suspended air cleaner: 180

[8]) With hand-operated or electro-magnetic cutoff valve

[9]) With electro-magnetic cut-off valve

[10]) From February 1955 (Type 122/1): Only plastic float 5.7 grams

[11]) adjustable

K

Type	from Engine No.	Part No.	Identification mark	Minimum delivery capacity[1] cc/min	Minimum delivery capacity[1] rpm	Maximum delivery pressure m water column
1	from start of production 1976996[2]	111127025 B	—	167	1000—3000	0.9—1.3 (1.3—1.8 psi)
			—	267	3000—3400	1.8 (2.5 psi)
	5000001 7777338	211127025	—	300	3400	2.0 (2.8 psi)
			VW 3	400	3400	2.0 (2.8 psi)
	D/F 0000001	**113127025 A**	**VW 7**			
2 (1500)	from start of production 394900[2]	111127025 B	—	167	1000—3000	0.9—1.3
			—	267	3000—3400	1.8
	3403348 7777338 from start of production	**211127025**	—	300	3400	2.0
			VW 3	400	3800	2.0
3	from start of production 0277034	311127025	—	350	3800	3.0 (4.2 psi)
			VW 2	400	3800	3.0
	K/T 0000001	**311127025 A[3]**	**VW 6**			
122	from start of production 122—045787	111127025 B	—	167	1000—3000	0.9—1.3
			—	267	3000—3400	1.8
	122—073001 122—119334	211127025	—	300	3400	2.0
			VW 3	400	3400	2.0
	122—148421	**113127025 A**	**VW 7**			
126 (126 A)	from start of production 126—008186	211127025	—	400	3800	2.0
			VW 3			
	126—013846	**113127025 A**	**VW 7**			
124 (M 999)[4]	from start of production	124127025	VW 4	400	3800	2.0
124 A (M 999)[4]	from start of production	311127025	VW 2			3.0
	124—002864	**124127025 A[3][5]**	**VW 8**			2.0
	124—002864	**311127025 A[3]**	**VW 6**			3.0

Remarks

[1]) Via 1.5 mm dia. float needle valve (1.2 mm dia. on Type 3/Twin-carburetor)

[2]) Chassis No.!

[3]) Pump is fitted with a protective cap (Part No. 311127195 A)

[4]) Engine without governor

[5]) 113127025 A only as replacement. Turn upper part 60° to right and fit cap as detailed at [3]).

K

FRONT AXLE

I. Tolerances and Wear Limits

Type 1		On installation (new parts)	Wear limit
a - Link pin axle (up to July 1965)			
1 - Torsion arm	twist	max. 0.5 (.02″)	
2 - Torsion arm / fiber bush (upper limit if possible, fiber is apt to swell)	clearance	0.20—0.27 (.008″—.010″)	0.40 (.016″)
3 - Torsion arm link pin / sintered iron bush	clearance	0.04—0.09 (.0016″—.0035″)	0.22 (.009″)
4 - Torsion arm link pin	diameter	17.94—17.91 (.7063″—.7052″)	17.80 (.7008″)
5 - King pin / bush	clearance	0.02—0.05 (.0008″—.0018″)	0.08 (.003″)
steering knuckle / torsion arm link	preload	0.00—0.04 (.0000″—.0016″)	
6 - Steering arm / steering gear case	end play	0.4—1.0 (.016″—.04″)	
7 - Steering gear (sector steering)			
a) Sector shaft	end play	0.25 (.0098″)	
	clearance	0.04—0.08 (.0016″—.0032″)	
b) Sector shaft spring	loaded length	20.3 (.8″)	
Tension of loaded spring		60—76 kg (130—165 lbs.)	
c) Sector shaft thrust pin	length	19.9—20.1 (.7835″—.7913″)	
8 - Steering gear **(roller steering)**			
Roller shaft seat for bushes	diameter	23.99—23.98 (.9444″—.9440″)	
Bushes for roller shaft	inside dia	24.02—24.00 (.9456″—9448″)	

		On installation (new parts)	Wear limit
b - Ball joint axle (from August 1965)			
1 - Ball joint	play	max. 0.5 (.02″)	2.0 (.08″)
2 - Metal bush for torsion arm in axle tube	inside dia.	37.06—37.16 (1.458—1.462″)	37.38 (1.471″)
3 - Steering knuckle/stub axle	distortion	0.15[1] (.006″)	
4 - Axle beam			
a) Seating for needle bearing, upper	dia.	45.97—45.99 (1.809—1.810″)	
Needle bearing	dia.	46.0 (1.811″)	
Oversize	dia.	46.17—46.19 (1.817—1.818″)	
Needle bearing	dia.	46.2 (1.819″)	
b) Seating for needle bearing, lower	dia.	49.97—49.99 (1.967—1.968″)	
Needle bearing	dia.	50.0 (1.968″)	
Oversize	dia.	50.17—50.19 (1.975—1.976″)	
Needle bearing	dia.	50.2 (1.9763″)	
5 - Steering gear (see section 'a' / point 8)			
Type 2			
1 - Torsion arm	twist	max. 0.3 (.012″)	
2 - Torsion arm / fiber bush (upper limit if possible, bush is apt to swell)	clearance	0.20—0.27 (.008″—.011″)	0.40 (.016″)
3 - Torsion arm link pin	diameter	19.92—19.91 (.7843″—.7839″)	19.78 (.7784″)
from Chassis No. 1144303	diameter	**21.92—21.91** (.862—.861″)	**21.78** (.856″)
4 - Needle bearing (removed): inside contact diameter		19.94—19.95 (.7850″—.7854″)	

[1]) measured with VW 258k

V

		On installation (new parts)	Wear limit
from Chassis No. 1144303	diameter	**21.94—21.95** (.863—.864″)	
5 - King pin	diameter	**23.97—23.95** **(.9436″—.9430″)**	
King pin / bush	clearance		**0.10** **(.004″)**
up to Chassis No. 999304:			
King pin / brass bush	clearance	0.02—0.05 (.0008″—.0021″)	0.10 (.004″)
6 - King pin / spacer without rubber seals	end play	max. 0.15 (.006″)	
7 - Swing lever shaft bush	ream out to	24.00—24.02 dia. (.9450″—.9457″)	24.04 (.9463″)
8 - Swing lever shaft	diameter	23.98—23.97 (.9440″—.9436″)	23.95 (.9429″)
9 - Steering lever shaft bush	ream out to	25.38—25.40 dia. (.999″—.1″)	
Steering lever shaft / bush	clearance	0.03—0.06 (.001″—.0024″)	0.10 (.004″)
10 - Steering spindle, installed, (measured at steering column top end)	run-out	max. 0.35 (.014″)	
11 - Steering column tube in steering gear case	seating depth	45—46 (1.77′—1.81″)	
Type 3			
1 - Ball joints, upper	play	no play	0.5[1] (0.02″)
Ball joints, lower	play	max. 0.5 (0.02″)	2.0 (0.08″)

[1]) With ball joint free of load

		On installation (new parts)	Wear limit
2 - Bearing bush for			
a) Torsion arm, upper	ream out to	35.15—35.20 (1.383″—1.385″) [2])	
b) Torsion arm lower	ream out to	33.17—33.22 (1.305″—1.307″) [2])	
3 - Axle beam			
a) Seat for upper needle bearing	diameter	43.97—43.99 (1.730″—1.731″)	
Needle bearing	diameter	44.0 (1.7322″)	
Thrust rings	diameter	44.15 (1.7381″)	
Oversize	diameter	44.17—44.19 (1.7388″—1.739″)	
Needle bearing	diameter	44.2 (1.7400″)	
Thrust rings	diameter	44.35 (1.7460″)	
b) Seat for lower needle bearing	diameter	46.97—46.99 (1.849″—1.850″)	
Needle bearing	diameter	47.0 (1.8504″)	
Oversize	diameter	47.17—47.19 (1.856″—1.857″)	
Needle bearing	diameter	47.2 (1.8582″)	
from Chassis No. 0127588	diameter	**49.97—49.99** **(1.967″—1.968″)**	
Needle bearing	diameter	50.0 (1.9685″)	
Oversize	diameter	50.17—50.19 (1.975″—1.976″)	
Needle bearing	diameter	50.2 (1.9663″)	
4 - Steering gear (see Type 1 / Point 8)			

[2]) only up to July 1964. From August 1964 (Chassis No. 315 000 001) metal bushes which must not be reamed out, are fitted

V

II. Technical Data and Settings

a - Steering

Vehicle Type	1				3		2		Remarks
Steering Type	Sector		Roller				Ross		
from Chassis No.	[1])	[2])	[3])	116000001	[1])	0090272	[1])	20—117902	
Overall ratio	14.15		14.34[4])	**15.0**	**14.8**		15.7	**15.1**	[1]) From start of production [2]) Type 14: 1665213; Type 15: 1665425; De Luxe Sedan: 1673351; Standard Sedan: 4630938 [3]) Type 14 and 15: 3933185; De Luxe Sedan: 4010995 [4]) Type 14: 14.7 [5]) Check that there is a gap of 10 ± 1 mm between upper torsion arm and tire on both locks [6]) Type 14: 11.25 m (37 ft); Standard Sedan up to Chassis No. 4630937: 11.5 m [7]) Type 34: 10.6 (34.8″)
Steering wheel turns (from lock to lock)	2.4		2.6	**2.7**	**2.8**		2.4	**2.8**	
Maximum wheel angle on full lock									
Wheel on inside of curve	32° ± 2°	34° ± 2°	34° + 2°	**34°—1°** [5])	32° 30′ — 2°	**max. 30°**	32° ± 30′	**34° ± 2°**	
outside	26° — 1°	28° — 1°	28° — 1°	**28°—1°** [5])	29° — 1° 30′	**27° ± 1°**	approx. 26°	**25° — 1°**	
Smallest turning circle ..... approx	**11.0 m**[6]) (36 ft)				**11.1 m**[7]) (36.3 ft)		**12.0 m** (39 ft)		

b - Front Torsion Bar Settings

Introduced from Chassis No.	Type	Number of leaves	Position	Diameter	Length	Fitting angle	Remarks
1—0517305	1	8 8	top bottom	— —	941.5 mm	49° ± 1° 53° 30′ ± 1°	
116000001	1	10 10	top bottom	— —	954 mm	**44° ± 30′** **35° 30′ ± 30′**	
0000001	3	—	—	14.9 mm	859 mm	**39° 10′ + 50′**	
up to Chassis No. 20—117901	21, 23 and 26	4 5	top bottom	— —	980 mm	17—18°	
	22, 24 and 27	5 5	top bottom	— —	980 mm	23—24°	
20—117902	2	9 9	top bottom	— —	980 mm	**37° ± 30′**	

c - Stabilizer (Type 3 only)

Model	Bar diameter
31, 34 and 36/460 kg[8])/1014 lbs	11.0 mm (.43″)
36/375 kg/826 lbs	13.7 mm (.54″)

[8]) From August 1964: 465 kg (1025 lbs)

V

III. Arrangement of shims (for Type 1 and 2 only)

a - Type 1 without link pin dust seals (up to Chassis No. 2921551)

Offset in mm	Number of Shims for				
	Upper Torsion Arm		Lower Torsion Arm		
	Inner (A)	Outer (B)	Inner (C)	Outer (D)	
5	3	7	7	3	There must always be a total of 10 shims on each link pin.
5.5	4	6	7	3	
6	4	6	6	4	
6.5	5	5	6	4	
7	5	5	5	5	
7.5	6	4	5	5	
8	6	4	4	6	
8.5	7	3	4	6	
9	7	3	3	7	

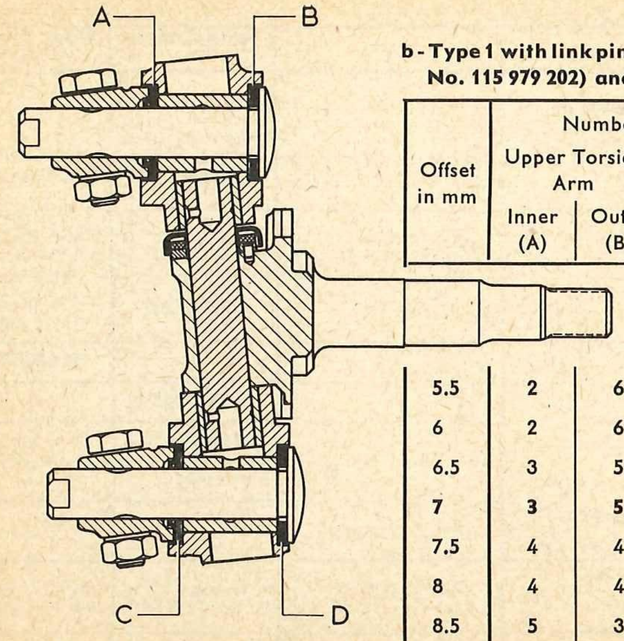

b - Type 1 with link pin dust seals (from Chassis No. 2921552 to Chassis No. 115 979 202) and Type 2

Offset in mm	Number of Shims for				
	Upper Torsion Arm		Lower Torsion Arm		
	Inner (A)	Outer (B)	Inner (C)	Outer (D)	
5.5	2	6	5	3	Each link pin must always be fitted with 8 shims and a protective washer.
6	2	6	4	4	
6.5	3	5	4	4	
7	3	5	3	5	
7.5	4	4	3	5	
8	4	4	2	6	
8.5	5	3	2	6	

V

IV. Values for Vehicle Alignment Check

For all track values the sign + means toe-in and — toe out

See test conditions

≙ = corresponds to

Designation	up to Chassis No.	from Chassis No.	Type 1	Typ 2	Type 3	Remarks
1 - 10 angular minutes equals a toe-in measurement of						
with 14'' wheels	—	—	—	**1.1 mm (.043')**	—	[1]) Standard Sedan from Chassis No. 4630938
with 15'' wheels	—	—	**1.2 mm (.047'')**	1.2 mm	**1.2 mm**	[2]) Standard Sedan up to Chassis No. 4630937
with 16'' wheels	—	—	1.3 mm (.051'')	1.3 mm		
2 - Front wheel toe-in with wheels not tensioned	—	—	**+18' to +40'** ≙ **+2mm to +4mm**	—5' to +15' ≙ 0 to +2 mm	+30' to +50' ≙ +3.6mm to +6mm	
	115979202	—	+16' to +34' ≙ +2 mm to +4 mm	—	—	
3 - Toe-in with wheels tensioned	—	116000001	**—5' to + 15'**	—	—	
	115979202[1])	—	0 to + 20'	—	—	
	1673350[2])	—	—10' to + 10'	—	—	
	—	—	—	—15' to + 5'	—	
	—	—	—	—	+ 20' to + 40'	**Test conditions** 1 - Instrument set correctly 2 - Vehicle unladen 3 - Tire pressures correct (see page 88/89) 4 - Vehicle aligned and bounced properly 5 - Upper torsion arm axial play correct (only Type 3)
4 - Amount of force used to tension wheels	—	—	10 kg ± 2 kg (22 lbs ± 4 lbs)	15 kg ± 3 kg (33 lbs. ± 6.5 lbs)	10 kg ± 2 kg (22 lbs. ± 4 lbs)	
5 - Maximum permissible difference between toe-in with wheels tensioned and not tensioned	—	—	max. 25'	max 20'	max. 20'	

V

Designation	up to Chassis No.	from Chassis No.	Type 1	Type 2	Type 3	Remarks
6 - Front wheel camber in straight-ahead position	— —	116000001 —	0°30′ ± 15′ 0°40′ ± 30′	— 0°40′ ± 30′	— 1°20′ ± 10′	[3]) to left [4]) to right [5]) maximum permissible difference [6]) Lift vehicle before measuring
Maximum permissible difference between sides	—	—	30′	30′	20′	
7 - Difference in wheel angle at 20° lock to left and right	—	—	—1° 35′ ± 15′[3]) —2° 25′ ± 25′[4])	—3° ± 20′	—1° ± 1°	
a - Model 113/117 and 151 Model 111/115 Model 114/118 and 152 Type 14	115979202	—	—2° ± 30′	—	—	
b - Model 113/117 and 151 Model 111/115	1430497 4630937	—	—1°40′ ± 30′[3]) —2°30′ ± 30′[4]) max. 1° [5])	—	—	
Model 114/118 and 152 Type 14	2256906 1644421	— —	—2° ± 1°	—	—	
8 - Axle beam angle	— 115979202 2018788 —	116000001 — — —	2° + 30′ 2° ± 15′ 2°30′ ± 15′ —	— — — 10′ ± 50′	— — — 11°50′[6])	
9 - Caster angle of a wheel corresponds to a camber angle difference on one wheel at 20° lock to left and right	— —	— —	3°20′ ± 1° 2°15′ ± 40′	max. 1° max. 40′	4° ± 40′ 2°40′ ± 25′	

Designation	up to Chassis No.	from Chassis No.	Type 1	Type 2	Type 3	Remarks
10 - Rear wheel camber with spring plates properly set[7])	—	—	—	—	3° ± 30′	[7]) See page 69 for spring plate settings
	— 2232160	2232161 —	3° ± 30′ 4° ± 30′	— —	—	
a - Model 211—216, 261—264 Model 231—238, 265—268 Model 221—228, 241, 244, 251, 281, 285	— — — }	20—117902	— — —	4° ± 30′ 3°30′ ± 30′ 3° ± 30′	— — —	
Type 27	—	420574 736388	— —	1°50′ ± 20′ 3° ± 30′	— —	
Type 21 F	—	425460	—	4°30′ ± 20′	—	
b - all Models	20—117901	—	—	3° ± 30′	—	
Maximum permissible difference in camber between sides	—	—	20′	20′	20′	
11 - Total rear wheel track with camber properly set	—	—	— 5′ ± 10′	—25′ ± 25′	0° ± 5′	
Type 27	— —	736388 420574	— —	—22′ ± 25′ —15′ ± 25′	— —	
12 - Maximum permissible deviation in wheel alignment	—	—	max. 10′	max. 13′	max. 5′	

REAR AXLE AND TRANSMISSION

I. Tolerances and wear limits

Designation		Standard transmission		Partly synchronized transmission		Fully synchronized transmission		Remarks
		On installation (new)	Wear limit	On installation (new)	Wear limit	On installation (new)	Wear limit	
1 - Main drive shaft/gland nut	radial clearance	0.12—0.19 (.005—.007″)	0.25 (.010″)	0.12—0.19	0.25	0.12—0.19	0.25	
2 - Main drive shaft								
a - measured at center bearing (between centers)	run-out	0.02 (.0008″)	max. 0.05 (.002″)	0.02	max. 0.05	—	—	
b - measured at pilot (when installed)	run-out	max. 0.20 (.008″)	0.30 (.012″)	max. 0.30 (.012″)		—		
3 - Drive shaft, front (surface for 3rd gear needle bearing)	run-out	—		—		max. 0.02		
4 - Preload of gearshift housing		0.02—0.11 (.0008—.0043″)		0.02—0.11		—		
5 - Gearshift housing bushes	inside dia.	15.05—15.03 ⌀ (.592—.591″)	15.25 ⌀ (.600″)	15.05—15.03 ⌀	15.25 ⌀	15.05—15.03 ⌀	15.25 ⌀	
6 - Inner shift lever	diameter	15.00—14.96 ⌀ (.590—.588″)	14.75 ⌀ (.580″)	15.00—14.96 ⌀	14.75 ⌀	15.00—14.96 ⌀	14.75 ⌀	
7 - Selector rod detent springs: Pressed together to fitting length of 21.5 mm with a	spring pressure	6.2 kg (13.6 lbs)		6.2 kg		—		
8 - Preload of transmission case halves and final drive covers on the differential ball bearings		0.10—0.18 (.004—.007″)		0.10—0.18		0.14 (.0055″)		
9 - Differential gears	back lash	0.10—0.20 (.004—.008″)		0.10—0.20		—		
10 - Rear axle shafts: a - Flange/fulcrum plates/differential side gears (4 parts)	clearance	0.10—0.30 (.004—.012″)	—	0.10—0.30	—	0.04—0.24 (.0016—.0098″)	0.25 (.010″)	

H

Designation		Standard transmission		Partly synchronized transmission		Fully synchronized transmission		Remarks
		On installation (new)	Wear limit	On installation (new)	Wear limit	On installation (new)	Wear limit	
up to Chassis No. 1757470 and 325100	clearance	0.05—0.23 (.002—.009″)	0.30 (.012″)	0.05—0.23	0.30	—	—	[1]) Try to keep to lower limit (0.10 mm/.004″)
b - Flange/differential side gears (measured across the convex faces)	clearance	0.03—0.10 (.001—.004″)	0.20 (.008″)	0.03—0.10	0.20	0.03—0.10	0.20	
c - Between centers, measured at bearing seat	run-out	max. 0.05 (.002″)		max. 0.05		max. 0.05		
11 - Transmission case/rear axle tube/final drive cover	clearance	0.40—0.60 (.016—.024″)	0.70 (.028″)	0.40—0.60	0.70	—	—	
12 - Plastic packing/transmission case/axle tube/final drive cover	clearance	—	—	—	—	0.25—0.35 (.010—.014″)	0.40 (.016″)	
from Chassis No. 2078055 and 388007	clearance	0.25—0.35 (.010—.014″)	0.40 (.016″)	0.25—0.35	0.40 (.016″)	—	—	
13 - Oil seal for rear wheel bearing	pressing depth	4.7—5.0 (.18—.2″)		4.7—5.0		—		
14 - Starter bush	inside dia.	12.55—12.57 (.493—(.494″)	12.65 (.497″)	12.55—12.57	12.65	12.55—12.57	12.65	
15 - Starter shaft/bush	radial clearance	0.09—0.14 (.0035—.005″)	0.25 (.010″)	0.09—0.14	0.25	0.09—0.14	0.25	
16 - Reduction gear shaft (Type 2)	run-out	max. 0.01 (.0004″)		max. 0.01		max. 0.01		
17 - 1st speed gearwheel	axial clearance	—		—		0.10—0.25[1]) (.004—.010″)		
18 - Gearwheels for 2nd, 3rd and 4th gears	axial clearance	—		0.10—0.25		—		
	radial clearance	—		0.04—0.07 (.0016—.0027″)		—		

H

Designation		Standard transmission		Partly synchronized transmission		Fully synchronized transmission		Remarks
		On installation (new)	Wear limit	On installation (new)	Wear limit	On installation (new)	Wear limit	
19 - 3rd speed gearwheel	axial clearance	0.40—0.75 (.016—.030″)	0.85 (.033″)	—		—		
20 - 4th speed gearwheel	axial clearance	0.25—0.40 (.010—.016″)	0.50 (.020″)	—	—	0.10—0.25 (.004—.010″)	—	
21 - Shift fork/shift ring	axial clearance	0.23—0.53 (.009—.021″)		—	—	—	—	
22 - Shift fork/1st speed gearwheel	axial clearance	—		0.5—0.7 (.020—.028″)		—		
23 - Shift fork/operating sleeve for 3rd and 4th speeds	axial clearance	—		0.2—0.4 (.008—.016″)		—		
24 - Shift fork/reverse gear	axial clearance	—		0.2—0.5 (.008—.020″)		—		
25 - Shift fork/operating sleeves for 1st/2rd and 3rd/4th speeds	axial clearance	—		—		0.10—0.30 (.004—.012″)		
26 - Bush for reverse gear	inside dia.	16.05—16.08 (.631—.632″)		16.05—16.08		—		
27 - Bush/spindle for reverse gear	radial clearance	—		0.05—0.09 (.002—.0035″)		—		
28 - Synchronizer rings/gearwheels (measured between end faces of toothed rings)	spacing	—	—	0.80 (.031″)	0.30 (.012″)	1.10 (.043″)	0.60 (.024″)	
up to Chassis No. 560700 (Type 2)	spacing	—	—	—	—	0.80 (.031″)	0.30 (.012″)	

H

II. Technical Data and Specifications

a - Gear Ratios:

Gearbox	Standard Trans-mission	Partly synchronized transmission	**Fully synchronized transmission**	Remarks
1st gear	3.60	3.60	3.80	[1]) With 17/33 teeth from Chassis No. 2256018 and 430695
2nd gear	2.07	1.8/1.94[1])	2.06	[2]) With 23/28 teeth from Chassis No. 1726006 and 282900
3rd gear	1.25	1.23/1.22[2])	1.32/1.22[3])	[3]) Type 2
4th gear	0.80	0.82	0.89/0.82[3])	
reverse gear	6.60	4.63	3.88	

Differential ratios	Type 1 and Type 2	Type 1[1]) Type 2[2])	Type 2[3]) **Type 3**	**Type 1[4])**	**Type 2/1 T**	Remarks
Klingelnberg	4.43	—	**4.125**	—	**4.375**	[1]) From Chassis No. 1338160
Gleason	4.375	4.43		**4.375**	—	[2]) From Chassis No. 210635 [3]) From Chassis No. 520000 [4]) From Chassis No. 3192507

Reduction gears (Type 2 only)		No. of teeth: Driven gear	No. of teeth: Axle shaft gear	Ratio	Remarks
Type 2/1200	up to Chassis No. 469446	21	15	1.4	
	from Chassis No. 469447	25	18	1.39	
Type 2/1500		**24**	**19**	**1.26**	

b - Torsion Bar Adjustment, rear

(Spring plates unloaded)

From Chassis No.	Type	Torsion Bar Length	Torsion Bar Diameter	Setting
—	1	627 mm (24.7″)	24 mm (.94″)	13° ± 30′
1-0929746		627 mm (24.7″)	24 mm (.94″)	12° ± 30′
2232161		627 mm (24.7″)	24 mm (.94″)	11° ± 30′
2528668		553 mm (21.8″)	22 mm (.87″)	16° 30′ + 50′
3067625		552 mm (21.7″)	22 mm (.87″)	16° 30′ + 50′
6200001		**552 mm (21.7″)**	**22 mm (.87″)**	**17° 30′ + 50′[1])**
—	2	553 mm (21.8″)	30 mm (1.18″)	4° ± 30′
20-117902		**590 mm (23.2″)**	**29 mm (1.14″)**	**20° ± 30′**
except				
420574	27	590 mm (23.2″)	29 mm (1.14″)	18° 40′ ± 20′
736388	**27**	**590 mm (23.2″)**	**26 mm (1.02″)**	**25° ± 20′**
425461	**21 F**	**590 mm (23.2″)**	**29 mm (1.14″)**	**21° 30′ ± 20′**
—	31 and 34	626 mm (24.6″)	23 mm (0.90″)	20° + 50′
316000001	**31 and 34**	**626 mm (24.6″)**	**23 mm (0.90″)**	**20° 30′ ± 50′**
—	**36/375 kg (826 lbs.)**	**626 mm (24.6″)**	**24 mm (0.94″)**	**18° 30′ + 50′**
—	**36/460 kg (1014 lbs.)[2])**	**626 mm (24.6″)**	**23 mm (0.90″)**	**21° 30′ + 50′**

[1]) When necessary, this setting can be used from Chassis No. 2528668, but only up to a maximum of 19°

[2]) From August 1964: 465 kg (1025 lbs)

H

c - Tightening transmission case nuts (only for standard and partly-synchronized transmission)

Tighten nuts to 2 mkg (14 ft lbs) in the following order:

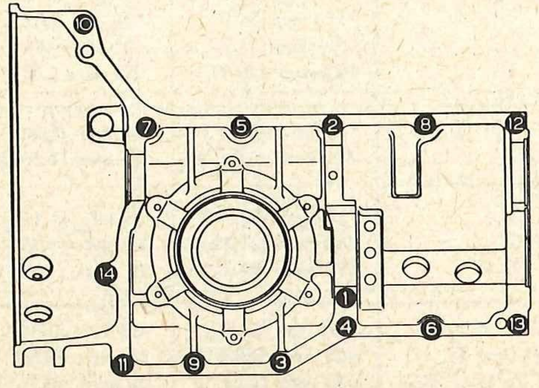

d - Differential adjustment

1 - Standard and partly-synchronized transmission

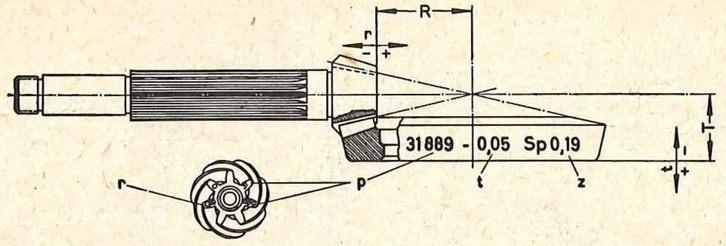

p = Matching number

T = Distance from drive pinion center to back of ring gear (constant value 40.00 mm/1.575″)

t = Departure from T

R = Distance — ring gear center/pinion end face (see table below)

r = Departure from R

z = Backlash

	Klingelnberg 7 : 31		Gleason	
	Module = 3.00	Module = 3.25	8 : 35	7 : 31
Mark	Pinion K	Ring Gear V	—	—
R =	59.22 mm (2.3315″)	59.22 mm (2.3315″)	59.22 mm (2.3135″) [1]	55.75 mm (2.1949″)

[1]) Not available as replacement parts.

H

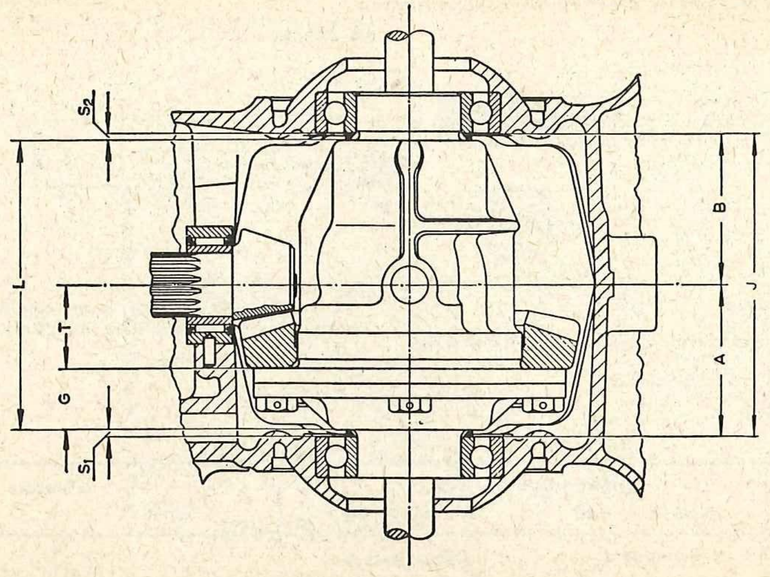

Designation	Measurements	Standard
A	Depth of left transmission case half	72.55 mm (2.856″)
B	Depth of right transmission case half	72.55 mm (2.856″)
J	Total depth of transmission case	145.10 mm (5.713″)
L	Length of differential housing	138.00 mm (5.433″)
G	Distance from back of ring gear to shim contact face	28.95 mm (1.140″)
V	Preload	0.14 ± 0.04 mm (.005 ± .001″)

Formulae to determine thickness of shims S_1 and S_2:

Type 1

$$S_1 = J - B - (T \pm t) - G + \frac{V}{2}$$

$$S_2 = J - L + V - S_1$$

Type 2

$$S_2 = J - A - (T \pm t) - G + \frac{V}{2}$$

$$S_1 = J - L + V - S_2$$

The drawing shows the differential of the Type 1.

On Type 2 vehicles the ring gear is situated in the right transmission case half.

H

R - Design dimension - ring gear center/pinion end face (see table)
r - Deviation from R (given in hundredths of a mm)
backlash of ring gear = 0.17—0.25 mm (.007—.010")
p - Matching number of gear set.

	Type 1	Type 2				Type 3	
		3/4 Ton		1 Ton			
Type of teeth	8 : 35 Gleason	8 : 33 Klingelnberg		8 : 33 Gleason	8 : 35 Klingelnberg	8 : 33 Klingelnberg	8 : 33 Gleason
"R" mm	58.70	59.70	58.70[1])	58.70			
Distinguishing features	The Gleason toothing becomes deeper towards the outside of the gear.						

[1]) Marking: From Chassis No. 572083: "P" on left of lettering
From Chassis No. 584927: "K" on end face of pinion

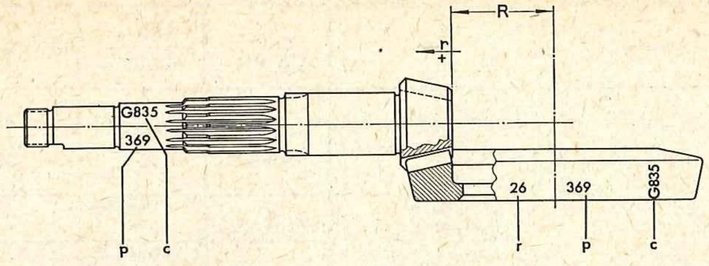

c - Identification mark altered
(Example: Gear set with 8.35 : 1 ratio and Gleason tooth profile "G 835")

H

BRAKES AND WHEELS

1 - Tolerances and wear limits

Designation		Up to Ch. No.	From Ch. No.	Type 1 On installation (new)	Type 1 Wear limit	Type 2 On installation (new)	Type 2 Wear limit	Type 3 On installation (new)	Type 3 Wear limit
1 - Master cylinder	stroke	—	115000001	**33.0 (1.3″)**		—		—	
	stroke	6502399	—	30.0 (1.2″)		—		—	
	stroke	—	1144303	—		**36.0 (1.4″)**		—	
	stroke	1144302	—	—		30.0 (1.2″)		—	
	stroke	—	0024846	—		—		**36.0[1] (1.4″)**	
	stroke	0024845	—	—		—		33.0 (1.3″)	
	diameter	—	115000001	**17.46 (.677″)**		—		—	
	diameter	6502399	—	19.05[2] (.75″)		—		—	
	diameter	—	117902	—		**22.20 (.874″)**		—	
	diameter	117901	—	—		19.05 (.75″)		—	
	diameter	—	0221275	—		—		**19.05[3] (.75″)**	
	diameter	0221274	—	—		—		20.64 (.812″)	
2 - Wheel cylinder:									
front	diameter	—	[2], [4]	**22.20 (.874″)**		—		—	
	diameter	[5]	—	19.05 (.75″)		—		—	
rear	diameter	—	[2], [4]	**19.05 (.75″)**		—		—	
	diameter	[5]	—	17.46 (.677″)		—		—	

Remarks

[1]) Type 36 since start of production

[2]) Standard Sedan from Chassis No. 4630938

[3]) Type 36 from Chassis No. 365000001 up to introduction of disc brakes: 20.64 mm dia. (.812″)

[4]) De Luxe Sedan from Chassis No. 1673351
Type 14 ..... from Chassis No. 1665213
Type 15 ..... from Chassis No. 1665425

[5]) De Luxe Sedan up to Chassis No. 1673350
Type 14 ..... up to Chassis No. 1665212
Type 15 ..... up to Chassis No. 1665424

B

Designation		Up to Ch. No.	From Ch. No.	Type 1 On installation (new)	Type 1 Wear limit	Type 2 On installation (new)	Type 2 Wear limit	Type 3 On installation (new)	Type 3 Wear limit	Remarks
front	diameter	—	117902	—		**25.40 (1.0″)**		—		[6]) Type 36: 23.80 mm dia. (.936″), up to Chassis No. 0221274: 25.40 mm dia. (1.0″)
	diameter	117901	—	—		22.20 (.874″)		—		
rear	diameter	—	117902	—		**22.20 (.874″)**		—		
	diameter	117901	—	—		19.05 (.75)		—		
front	diameter	—	0027850	—		—		22.20 (.874″)		
	diameter	0027849	—	—		—		20.64 (.812″)		
rear	diameter	—	—	—		—		**22.20[6]) (.874″)**		
3 - Brake drums:										
front	inside diameter	—	—	**230.1 + 0.2 (9.059 +.008″)**	**231.5 (9.114″)**	—		—		
rear	inside diameter	—	—	**230.0 + 0.2 (9.055 + .008″)**	**231.5 (9.114″)**	—		—		
Turning dimension for 0.5 mm oversize linings:										
front	inside diameter	—	—	**231.1 + 0.2** (9.098 + .008″)	**231.5** (9.114″)	—	—	—	—	
rear	inside diameter	—	—	**231.0 + 0.2** (9.094 + .008″)	**231.5** (9.114″)	—	—	—	—	
front and rear	inside diameter	—	1144303	—	—	**250.0 + 0.2 (9.842 + .008″)**	**251.5 (9.901″)**	—	—	
Turning dimension for 0.5 mm oversize linings:										
front and rear	inside diameter	—	1144303	—	—	**251.0 + 0.2 (9.882 + .008″)**	**251.5 (9.901″)**	—	—	
front	inside diameter	1144302	—	—	—	230.2 + 0.3 (9.063 + .012″)	231.8 (9.125″)	—	—	

B

Designation	Up to Ch. No.	From Ch. No.	Type 1 On installation (new)	Type 1 Wear limit	Type 2 On installation (new)	Type 2 Wear limit	Type 3 On installation (new)	Type 3 Wear limit	Remarks
rear ..... inside diameter	1144302	—	—	—	230.0 + 0.2 9.055 + .008″)	231.5 (9.114″)	—	—	
front and rear ..... inside diameter	117901	—	—	—	230.0 + 0.2 9.055 + .008″)	—	—	—	
Turning dimension for 0.5 mm oversize linings:									
front ..... inside diameter	1144302	—	—	—	231.2 + 0.3 9.102 + .012″)	231.8 (9.126″)	—	—	
rear ..... inside diameter	1144302	—	—	—	231.0 + 0.2 9.094 + .008″)	231.5 (9.114″)	—	—	
front and **rear** ..... inside diameter	—	0221275	—	—	—	—	**248.1 + 0.2 (9.766 + .008″)**	**249.5 (9.822″)**	
Turning dimension for 0.5 mm oversize linings:									
front and **rear** ..... inside diameter	—	0221275	—	—	—	—	**249.1 + 0.2 (9.806 + .008″)**	**249.5 (9.822″)**	
front ..... inside diameter	0221274	—	—	—	—	—	231.1 + 0.2 (9.098 + .008″)	232.5 (9.153″)	
rear ..... inside diameter	0221274	—	—	—	—	—	231.0 + 0.2 (9.094 + .008″)	232.5 (9.153″)	
	0076299	—	—	—	—	—	230.1 + 0.2 (9.059 + .008″)	231.5 (9.114″)	
Turning dimension for 0.5 mm oversize linings:									
front ..... inside diameter	0221274	—	—	—	—	—	232.1 + 0.2 (9.137 + .008″)	232.5 (9.153″)	
rear ..... inside diameter	0221274	—	—	—	—	—	232.0 + 0.2 (9.133 + .008″)	232.5 (9.153″)	
	0076299	—	—	—	—	—	231.1 + 0.2 (9.098 + .008″)	231.5 (9.114″)	

B

Designation		Up to Ch. No.	From Ch. No.	Type 1 On installation (new)	Type 1 Wear limit	Type 2 On installation (new)	Type 2 Wear limit	Type 3 On installation (new)	Type 3 Wear limit	Remarks
front and rear	wall thickness	—	—	—	4.0 (.16″)	—	4.0 (.16″)	—	4.0 (.16″)	[7]) Standard ..... up to Chassis No. 4630937
	out of round	—	—	max. 0.1 (.004″)		max. 0.1		max. 0.1		
	taper	—	—	max. 0.1 (.004″)		max. 0.1		max. 0.1		
	lateral run-out	—	—	max. 0.25 (.010″)		max. 0.25		max. 0.25		
measured at friction surface	radial run-out	—	—	max. 0.15 (.006″)		**max. 0.1 (.004″)**		max. 0.2 (.008″)		
	radial run-out	1144302	—	—		max. 0.2 (.008″)		—		
4 - Brake linings:										
front	width	—	[2]), [4])	**40.0 (1.6″)**		—		—		
	width	[5]), [7])	—	30.0 (1.2″)		—		—		
rear	width	—	—	**30.0 (1.2″)**		—		—		
front	width	—	1144303	—		**55.0 (2.2″)**		—		
	width	1144302	—	—		50.0 (2″)		—		
	width	117901	—	—		40.0 (1.6″)		—		
rear	width	—	1144303	—		**45.0 (1.8″)**		—		
	width	1144302	—	—		40.0 (1.6″)		—		
front	width	—	—	—		—		50.0 (2″)		
rear	width	—	0076300	—		—		**45.0 (1.8″)**		
	width	0076299	—	—		—		40.0 (1.6″)		

B

Designation		Up to Ch. No.	From Ch. No.	Type 1 On installation (new)	Type 1 Wear limit	Type 2 On installation (new)	Type 2 Wear limit	Type 3 On installation (new)	Type 3 Wear limit	Remarks
front and rear	thickness	—	—	**4.0—3.8 (.16—.15″)**	**2.5 (.10″)**	—	—	—	—	
oversize	thickness	—	—	**4.5—4.3 (.177—.17″)**	**2.5 (.10″)**	—	—	—	—	
front and rear	thickness	—	117902	—	—	**5.0—4.8 (.20—.18″)**	**2.5 (.10″)**	—	—	
oversize	thickness	—	117902	—	—	**5.5—5.3 (.22—.21″)**	**2.5 (.1.0″)**	—	—	
front and rear	thickness	117901	—	—	—	4.0—3.8 (.16—.15″)	2.5 (.10″)	—	—	
oversize	thickness	117901	—	—	—	4.5—4.3 (.177—.17″)	2.5 (.10″)	—	—	
front and **rear**	thickness	—	0076300	—	—	—	—	**4.05—3.85 (.158—.151″)**	**2.5 (.10″)**	
oversize	thickness	—	0076300	—	—	—	—	**4.55—4.35 (.178—.170″)**	**2.5 (.10″)**	
front and rear	thickness	0076299	—	—	—	—	—	4.0—3.8 (.16—.15)	2.5 (.10″)	
oversize	thickness	0076299	—	—	—	—	—	4.5—4.3 (.177—.17)	2.5 (.10″)	
5 - Wheel disc	radial run-out	—	—	max. 1.5 (.060″)		max.1.5 (.060″)		max. 1.5 (.060″)		
	lateral run-out	—	—	max. 1.5 (.060″)		max. 1.5 (.060″)		max. 1.5 (.060″)		
6 - Cylinder in caliper	diameter	—	316000001	—	—	—	—	42.0 mm (1.653″)	—	

B

Designation		Up to Ch. No.	From Ch. No.	Type 1 On installation (new)	Type 1 Wear limit	Type 2 On installation (new)	Type 2 Wear limit	Type 3 On Installation (new)	Type 3 Wear limit	Remarks
7 - Brake disc	thickness	—	316000001	—	—	—	—	9.50—9.45 mm (.374—.372″)	8.0 mm (.314″)	[8]) measured without pad carrier plate
Machining dimension	thickness	—	316000001	—	—	—	—	8.5 mm (.334″)	8.0 mm	
	thickness tolerance	—	316000001	—	—	—	—	max. 0.02 mm (.0008″)	—	
	disc run-out	—	316000001	—	—	—	—	max. 0.2 mm (.008″)	—	
8 - Friction pad	thickness[8])	—	316000001	—	—	—	—	10.0 mm (.393″)	2.0 (.080″)	

B

II. Tire Data

Note: For long, high-speed trips, the pressures should be increased by 0.2 atü (3 psi)

Type/Model	1		2 ¾ Ton up to Ch. No. 20-117901		2 ¾ Ton up to Ch. No. 1 222025		2 1 Ton		2 ¾ Ton from Ch. No. 1 222026		31 and 34		36/375 kg (826 lbs.)		36/465 kg[1]) (1025 lbs.)	
Tire (tubeless)	5.60—15[2])		5.50—16 (with tube)		6.40—15 (with tube)		7.00—14				6.00—15 L[3])		6.00—15 L		6.00—15 L 6 PR	
Rim	4 J × 15		3.50 D × 16		4½ K × 15		5 JK × 14				4½ J × 15					
Inflation pressures in atü and (psi)	front	rear	front	rear	front	rear	front	rear	front	rear	front	rear	front	rear	front	rear
a - up to two occupants	1.1 (16)	1.7 (24)	—	—	—	—	—	—	—	—	1.1 (16)	1.7 (24)	—	—	—	—
b - fully loaded	1.2 (17)	1.8 (26)	—	—	—	—	—	—	—	—	1.2 (17)	1.8 (26)	—	—	—	—
c - with half payload	—	—	—	—	—	—	—	—	—	—	—	—	1.2 (17)	1.8 (26)	1.2 (17)	1.8 (26)
d - up to ¾ payload	—	—	2.0 (28)	2.0 (28)	2.0 (28)	2.3 (33)	2.0 (28)	2.3 (33)	2.0 (28)	2.1 (30)	—	—	—	—	—	—
e - with full payload	—	—	2.5 (36)	2.75 (39)	2.0 (28)	2.5 (36)	2.0 (28)	2.8 (40)	2.0 (28)	2.3 (33)	—	—	1.2 (17)	2.6 (37)	1.2 (17)	3.0 (43)
f - Ambulance	—	—	2.0 (28)	2.0 (28)	1.8 (26)	1.8 (26)	—	—	1.8 (26)	1.8 (26)	—	—	—	—	—	—

Remarks

[1]) Up to August 1964: 460 kg (1014 lbs.)
[2]) Tubeless from August 1956
[3]) Type 3 from Aug. 1963: 6.00 S 15 L

Tire rotation (for all Types)
If the tires show signs of uneven wear after a considerable mileage the wheels can be rotated as shown in the illustration:

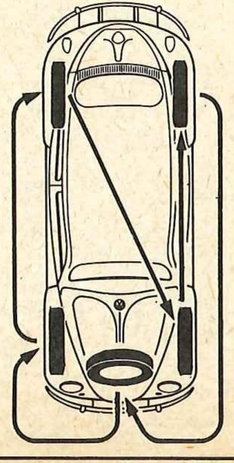

B

ELECTRICAL SYSTEM

1. Distributors (arranged in order of introduction)

Type 1

Standard	as replacements
30 bhp - 7.5° before TDC	
VJU 4 BR 2 [1] VJU 4 BR 3 [1] VJU 4 BR 8 [2] VJUR 4 BR 8	VJUR 4 BR 8
ZV/JUR 4 R 1 [3] ZV/PAU 4 R 1 [4] ZV/PAUR 4 R 1 [4]	ZV/PAU 4 R 6
ZV/PAU 4 R 2 ZV/PAU 4 R 1 ZV/PAU 4 R 5 VW 113905205 B	ZV/PAU 4 R 6 VW 113905205 J
ZV/JU 4 R 3 Bosch 111905205 M VW 211905205 L	Bosch 111905205 N VW 113905205 J
34 bhp - 10° before TDC	
ZV/PAU 4 R 2 ZV/PAU 4 R 1 ZV/PAU 4 R 5 VW 113905205 B	ZV/PAU 4 R 6 Bosch 113905205 N VW 113905205 J
ZV/JU 4 R 3 Bosch 111905205 M/N VW 211905205 L VW 113905205 J	Bosch 111905205 N Bosch 113905205 N VW 113905205 J
40 bhp - 7.5° before TDC	
Bosch 113905205 K VW 113905205 L	Bosch 113905205 K VW 113905205 L

Type 2

Standard	as replacements
30 bhp - 7.5° before TDC	
VJ 4 BR 2 [1] VJ 4 BR 3 [1] VJ 4 BR 8 [2] VW 211905205 B VJR 4 BR 8 VJR 4 BR 25 VJ 4 BR 25 VW 211905205 H	VJR 4 BR 25
34 bhp - 10° before TDC	
ZV/PAU 4 R 2 ZV/PAU 4 R 1 ZV/PAU 4 R 5 VW 113905205 B	ZV/PAU 4 R 6 Bosch 113905205 N VW 113905205 J
ZV/JU 4 R 3 Bosch 111905205 M/N VW 211905205 L VW 113905205 J	Bosch 111905205 N Bosch 113905205 N VW 113905205 J
42 bhp - 10° before TDC	
ZV/PAU 4 R 5 VW 113905205 B	ZV/PAU 4 R 6
ZV/JU 4 R 3 Bosch 111905205 M/N VW 211905205 L VW 113905205 J	Bosch 111905205 N Bosch 113905205 N VW 113905205 J
44 bhp - 7.5° before TDC	
Bosch 131905205	Bosch 131905205

Type 3

Standard	as replacements
45 bhp - 10° before TDC	
ZV/PAU 4 R 6 [5] ZV/JU 4 R 3 Bosch 111905205 M/N	ZV/PAU 4 R 6 ZV/PAU 4 R 6 Bosch 111905205 N
54 bhp/1.5 liter - 10° before TDC	
ZV/JCU 4 R 3 Bosch 311905205 D/E	ZV/JCU 4 R 3 Bosch 311905205 E
54 bhp/1.6 liter - 7.5° before TDC	
Bosch 311905205 F	Bosch 311905205 F
Industrial Engines	
all Types except 124 and 124A - 7.5° before TDC	
VJ (R) 4 BR 25	VJR 4 BR 25
124 and 124 A - 10° before TDC	
VJR 4 BR 25	VJR 4 BR 25
124 and 124 A/M 999 - 10° before TDC	
ZV/PAU 4 R 6 ZV/JU 4 R 3 Bosch 111905205 M/N	Bosch 111905205 N

Further information on the interchangability of distributors is given in Technical Bulletin M 1/1964 Edition.

Important!

If pinking occurs when using low octane fuels, the ignition timing can be retarded 2.5° on all engines.

Remarks

[1]) When changing from recessed to flat crown pistons, it is advisable to set the VJUR distributor (Type 1) or the VJR 4 BR 8 (Type 2) to 10° before TDC.

[2]) If these distributors are fitted when changing from flat to recessed crown pistons, set ignition as follows:

Type 1	Type 2	Ignition setting
VJU 4 BR 2	VJ 4 BR 2	2.5° before TDC
VJU 4 BR 3	VJ 4 BR 3	5° before TDC

[3]) If the ZV/JUR 4 R 1 distributor is replaced by the ZV/PAU 4 R 6 type, the distributor drive shaft must be turned back 1 tooth (30°) against the direction of motion with No. 1 cylinder at firing point.

[4]) Only for Karmann Ghia models.

[5]) From Engine No. 0065764 to 0087417: **12.5°** before TDC (right-hand mark on crankshaft pulley)

General Ignition Data

Magneto	a - Type 122 up to July 1965	b - Type 122 from August 1965, Type 126, 126 A and as replacements for "a"
VW Part No. (unchanged)	122905705 A	**122905705 B** [6]
Former Order No. (Scintilla-Vertex)	OVP 4 L 402 Z 144	OVP 4 L 402 Z 247 [6]
New Order No. (Bosch)	0205040006	0205040010 [6]

[6]) suppressed

Contact breaker gap

Battery ignition ..... 0.4 mm (.016")
Magneto ..... 0.3—0.4 mm (.012—.016")

Spark plugs	Battery Ignition	Magneto
Heat value	175	
Plug thread	14 mm	
Electrode gap	0.6—0.7 mml (.024—.028")	0.4—0.5 mm (.016—.020")
Types: Bosch	W 175 T 1	
Beru	175/14	
Champion	L 87 Y	

or plugs with similar values from other manufacturers

Firing order ..... 1 — 4 — 3 — 2

E

I. Lighting

Designation	Up to Chassis No.	From Chassis No.	Type/Model	Bulb (DIN 72 601)	Part No.	Remarks
1 - Headlamps:						
a - for asymmetric low beams	—	—	all	A 6 V 45/40 W	N 17 7051	
b - for symmetric low beams	—	—	1 and 2	B 6 V 35/35 W	N 17 7011	
2 - Parking lamps:						
a - for asymmetric low beams	—	—	all	HL 6 V 4 W	N 17 7171	
b - for symmetric low beams	—	—	1 and 2	H 6 V 2 W	N 17 7201	
3 - Tail lamp	1—929745	—	11	G 6 V 5 W	N 17 7181	
Stop lamp	—	—	3	R 6 V 18 W	N 17 7311	
Tail lamp	1 708049	—	14	L 6 V 5 W	N 17 7251	
Stop/turn indicator lamp				— 6 V 15 W	141 945 167	
Tail/stop lamp	—	1—929746	11	S 6 V 5/18 W	N 177371	
	—	—	2			
Turn indicator lamp, additional	—	3 856 472	11	R 6 V 18 W	N 177311	
	—	802 986	2			
	—	—	3			
Tail lamp	—	1 708050	14	G 6 V 5 W	N 17 7181	
Stop/turn indicator lamp				R 6 V 18 W	N 17 7311	
4 - Front turn indicator lamp	—	—	all	R 6 V 18 W	N 177311	
5 - License plate lamp	except: —	—	11, 2, 31, and 36	G 6 V 10 W	N 177191	
	5677118	1 600 440	11	G 6 V 5 W	N 177181	
	—	5 677 119	111/115			
	—	1 676 789	14			
	—	—	34			
	1 676 788	—	14	L 6 V 5 W	N 17 7251	
	351 735	—	2	K 6 V 10 W	N 17 7231	

E

Designation	Up to Chassis No.	From Chassis No.	Type/Model	Bulb DIN 72 601	Part No.	Remarks
6 - Instrument panel and warning lamps	except: —	—	all	J 6 V 1.2 W	N 177221	[1]) Except 'N' Models, 1500 A Sedan and 1500 Square back Sedan
	except: 117901	—	2	J 6 V 0,6 W	N 177211	
7 - Interior lamp	except: —	—	all	K 6 V 10 W	N 177231	
	—	145 000 001	14	HL 6 V 4 W	N 177171	
	—	155 000 001	15			
	1 649 252	—	14	H 65 6 V 5 W	141 947 199	
	—	—	2	L 6 V 5 W	N 177251	
8 - Luggage compartment lamp	—	—	3[1])	K 6 V 10 W	N 177231	
9 - Parking lamps (side)	—	—	3[1])	HL 6 V 4 W	N 177171	
10 - Fog lamps	—	—	34	D 6 V 35 W	N 177091	
11 - Spot lamp and reversing lamp	—	—	27	E 6 V 25 W	N 177101	
12 - Red Cross Lamp	—	—	27	R 6 V 18 W	N 177311	

II. Batteries

a - Standard equipment

Type	1	2	3
up to Chassis No.	929745: 6 V/70 Ah	117901: 6 V/84 Ah	— —
from Chassis No.	929746: 6 V/66 Ah	117902: 6 V/77 Ah	0000001:

b - Checking battery

Level of acid over the plates and separators 5 mm.

If acid level indicators are fitted, top acid up to level shown.

Cell voltage (measured with a cell tester):

Charged: 2.0 V
Discharged: 1.6 V

The difference in voltage between the cells must not exceed 0.2 Volt.

State of charge	Normal			Tropical	
	° Bé	Specific gravity	Acid freezes at	° Bé	Specific gravity
Discharged	16°	1.12	—11°C/12,2° F	11°	1.08
Half charged	24°	1.20	—27°C/16,6° F	18°	1.14
Fully charged	32°	1.285	—68°C/90,0° F	27°	1.23

E

GENERAL TECHNICAL DATA

I. Table of Types

LHD	RHD	Volkswagen 1200 and 1300	Official Type Designation
111	112	1200 A Sedan	11
113	114	1300 Sedan	
115	116	1200 A Sedan with folding sliding roof	
117	118	1300 Sedan with steel sliding roof	
141	142	1300 Karmann Ghia Convertible, two seater	14
143	144	1300 Karmann Ghia Coupé	
151	152	1300 Convertible, four seater	15
		Volkswagen Transporter	
211	—	Delivery Van ..... (wing door right)	21
213	214	Delivery Van ..... (wing door left)	
215	216	Delivery Van ..... (wing door left and right)	
—	—	High roofed delivery van ..... (with and without sales flap)	21—222
—	—	Fire Truck/Van (211 M 140)	21 F
221	—	Micro Bus ..... (wing door right)	22
223	224	Micro Bus ..... (wing door left)	
225	—	Micro Bus with sunroof ..... (wing door right)	
—	228	Micro Bus with sunroof ..... (wing door left)	

LHD	RHD	Volkswagen Transporter (contd.)	Official Type Designation
231	—	Kombi ..... (wing door right)	23
233	234	Kombi ..... (wing door left)	
235	—	Kombi with sunroof ..... (wing door right)	
237	238	Kombi with sunroof ..... (wing door left)	
241	—	De Luxe Micro Bus (9 seater) ..... (wing door right)	24
—	244	De Luxe Micro Bus (9 seater) ..... (wing door left)	
251	—	De Luxe Micro Bus (7 seater) ..... (wing door right)	25
261	—	Pick-up ..... (locker lid right)	26
263	264	Pick-up ..... (locker lid left)	
265	—	Pick-up with double cab ..... (crew cab door right)	26—16
267	268	Pick-up with double cab ..... (crew cab door left)	
—	—	Pick-up with enlarged platform (26 M 200)	26—200
—	—	Pick-up with enlarged wooden platform (26 M 201)	26—201
271	—	Ambulance ..... (wing door right)	27
273	274	Ambulance ..... (wing door left)	
281	—	Micro Bus (7 seater) ..... (wing door right)	28
285	—	Micro Bus (7 seater) with sunroof ..... (wing door right)	

T

LHD	RHD	Volkswagen 1500 and 1600	Official Type Designation
311	312	Fastback Sedan (1600 TL)	31
313	314	Fastback Sedan with steel sliding roof	
315	316	1500 A Sedan	
317	318	1500 A Sedan with steel sliding roof	
343	344	1600 Karmann Ghia Coupé	34
345	346	1600 Karmann Ghia Coupé with electrically operated steel sliding roof	
361	362	1600 Squareback Sedan	36
363	364	1600 Squareback Sedan with steel sliding roof	
365	366	1500 Squareback Sedan	
367	368	1500 Squareback Sedan with steel sliding roof	
—	—	Squareback Sedan as Delivery Van 36 M 265	36—265

Type	VW Industrial Engines	
122	VW Industrial Engine 1.2 l	122
124	VW Industrial Engine 1.5 l standard flat version	124
—	VW Industrial Engine 1.5 l, flat version, without governor (124 M 999)	124—999
124 A	VW Industrial Engine 1.6 l, standard flat version	124 A
—	VW Industrial Engine 1.6 l, flat version, without governor (124 A-M 999)	124 A—999
126	VW Industrial Engine 1.5 l with vertical fan housing	126
126 A	VW Industrial Engine 1.6 l with vertical fan housing	126 A

Short designations in technical publications	up to July 1965	from August 1965
a - **Volkswagen 1200 and 1300**	1	1
Volkswagen 1200 and 1300, all models	1/1200	1/1300
VW Standard, Sedan A, VW 1200 A	1/1200—30 bhp	1/1200 A
VW 1200 De Luxe Sedan and VW 1300 Sedan	11/1200	11/1300
Karmann Ghia Models	14/1200	14/1300
Convertible, four seater	15/1200	15/1300
b - **Volkswagen Transporter**	2	2
with 1.2 l engine } all models {	2/1200	—
with 1.5 l engine } all models {	2/1500	—
with 1 ton payload } all models {	2/1 t	2
c - **Volkswagen 1500 and 1600**	3	3
VW 1500 S and 1600, all models	3/1500 S	3/1600
VW 1600, Fastback Sedan	—	31/1600
VW 1600, Karmann Ghia Coupé	—	34/1600
VW 1600, Squareback Sedan	—	36/1600
VW 1500 N and 1500, all models	3/1500 N	3/1500
VW 1500 A, Sedan	—	31/1500
VW 1500, Squareback Sedan	—	36/1500
VW 1500, Squareback Delivery Van	—	36-265
VW Squareback Sedan, 1500 and 1600 { with 375 kg payload	—	36/375 kg
VW Squareback Sedan, 1500 and 1600 { with 465 kg payload	—	36/465 kg
d - **VW Industrial Engine**		
VW Industrial Engine 1.2 l	122	122
VW Industrial Engine 1.5 and 1.6 l, standard flat verison	124	124 A
VW Industrial Engine 1.5 and 1.6 l, flat version (without governor/M999)	124—999	124 A—999
VW Industrial Engine 1.5 and 1.6 l, with vertical fan housing	126	126 A

T

II. Tightening torques for nuts and bolts

Designation	Class	Thread	mkg	ft. lbs.	Remarks
a - Engine (34, 40, 42 and 44 bhp)					[1]) Tightening sequences are given on page 34/35
1 - Nuts for crankcase halves	35 S 20 K (5 D)	M 12 × 1.5	3.5	25	[2]) As under a - 11 from August 1959
2 - Screws and nuts for crankcase halves	5 S	M 8	2.0	14	
3 - Cylinder head nuts[1])	5 D	M 10	3.2	23	
4 - Rocker shaft nuts	5 S (8 G)	M 8	2.0—2.5	14—18	
5 - Flywheel gland nut	8 G	M 28 × 1.5	30.0	217	
6 - Connecting rod bolts	10 K	M 9 × 1	4.5 ± 0.5	32 ± 3.6	
7 - Special nut for fan	5 S	M 12 × 1.5	5.5—6.5	40—47	
8 - Generator pulley nut	5 S	M 12 × 1.5	5.5—6.5	40—47	
9 - Crankshaft pulley bolt	9 S 20 K	—	4.0—5.0	29—36	
10 - Spark plugs	—	M 14 × 1.25	3.0—4.0	22—29	
11 - Oil drain plug	9 S 20 K (5 S)	M 14 × 1.5	3.5	25	
b - Engine (30 bhp)					
as under "a", but with following exceptions:					
1 - Nuts for crankcase halves	5 S	M 10	3.0	22	
3 - Cylinder head nuts[1])	5 D	M 10	3.6—3.8	26—27	
11 - Oil drain plug[2])	5 S	M 18 × 1.5	3.0—4.0	22—29	
12 - Insert for spark plug	5 S	M 18 × 1.5	7.0—7.5	50—54	
c - Engine (45 and 54 bhp)					
as under "a", but with following exceptions:					
8 - Generator pulley nut	5 S	M 12 × 1.5	4.5	32	
9 - Special bolt for fan and crankshaft pulley	9 S 20 K	M 20 × 1.5	13.0—15.0	94—108	

T

Designation	Class	Thread	mkg	ft. lbs.
d - Engine (122/1, 122/2 and 126 A)				
as under "a" and "b", but with following exception:				
9 - Crank handle dog on crankshaft pulley	—	—	4.0—5.0	29—36
e - Engine (124 and 124 A)				
as under "a" and "c", but with following exception:				
13 - Special bolt for toothed belt drive wheel	9 S 20 K	M 20 × 1.5	6.0	43
a - Front axle with ball joints (from August 1965) (Type 1)				
Steering wheel nut	6 G	M 18 × 1.5	5.0	36
Drop arm bolt	8 G	M 12 × 1.5	7.0	50
Steering box cover screws	8 G	M 8 × 1.25	2.0—2.5	14—18
Locknut for roller shaft adjusting screw	5 S	M 10 × 1	2.5	18
Hexagon nuts for ball joints	6 S	M 12 × 1.5	5.0—7.0	36—50
		or M 10 × 1	4.0—5.0	29—36
Steering box to front axle	6 G	M 10	2.5—3.0	18—22
Front axle to frame	8 G	M 12 × 1.5	5.0	36
Shock absorber nut on side plate	6 G	M 10	2.0	14
Shock absorber nut on torsion arm	6 G	M 10	3.0—3.5	22—25
Steering damper screw on axle tube	6 G	M 10	4.0—4.5	18—22
Steering damper nut on tie rod	5 S	M 10	2.5—3.0	29—32
Front wheel bearing nut	—	M 16 × 1.5	1.5 [3]	11
Socket head screw in nut	—	—	1.5 [3]	11
Slotted nut on tie-rod	6 G	M 10 × 1	2.5 [4]	18
b - Front axle with link pins (up to July 1965)				
as under "a" but with following exceptions:				
Shock absorber screw on side plate	10 K	M 12 × 1.5	3.0—3.5	22—25
Inner wheel bearing nut	—	M 18 × 1.5	4.0 [5]	
Wheel bearing locknut	—	M 18 × 1.5	7.0 [5]	

Remarks

[3]) Tighten nut to 1.5 mkg first while turning wheel. Then slacken nut off until the specified axial play of 0.03—0.12 mm (.001—.005″) is obtained (Bracket VW 769 with dial gauge). If front axle tends to be noisy, keep play to lower limit (0.03—0.06 mm). When play is correct, tighten socket head screw to 1.5 mkg.

[4]) Turn on to cotter pin hole.

[5]) Tighten inner nut to 4.0 mkg first, fit new lock plate and slacken nut 72° (distance from one wheel bolt hole in drum to next). Then tighten outer nut to 7.0 mkg.

T

Designation	Class	Thread	mkg	ft. lbs.	Remarks
c - Front axle (Type 2)					
Steering wheel nut	5 S	M 16 × 1.5	2.5—3.0	18—22	[6]) Tighten inner nut to 3.5 mkg first while turning the wheel. Then fit new lock plate and slacken nut off until specified axial play of 0.03—0.12 mm (Bracket VW 769 with dial gauge) is obtained. If front axle tends to be noisy, keep play to lower limit (0.03—0.06 mm). When play is correct, tighten outer locknut to 7.0 mkg.
Upper and lower steering arm bolts (up to Chassis No. 20—117901)	—	M 12 × 1.5	6.5—7.5	47—54	
Swing lever pinch bolt (from Chassis No. 20—117902)	8 G	M 12 × 1.5	6.0	43	
Drop arm nut	4 D	M 20 × 1.5	8.0—10.0	58—72	
Front axle/frame bolts (side member)	12 K	M 12 × 1.5	10.0—11.0	72—80	
Steering gear bracket/frame bolts	8 G	M 10 × 22	4.0—4.5	29—32	
Steering gear/bracket bolts	8 G	M 10 × 40	4.0—4.5	29—32	
Steering damper/frame bolt and nut (up to Chassis No. 851389)	—	M 10 × 45	4.5	32	
Steering damper/axle tube screw (from Chassis No. 851390)	8 G	M 10 × 40	4.0—4.5	29—32	
Steering damper/swing lever screw	8 G	M 10 × 72	4.0—4.5	29—32	
Tie-rod and draglink nuts	8 G	M 10 × 1	2.5	18	
Steering knuckle/torsion arm (link pin bolts)	8 G	M 10	4.0—4.5	29—32	
Shock absorber securing bolt, upper (up to Chassis No. 971549)	10 K	M 10	4.0—4.5	29—32	
Shock absorber nut and bolt upper (from Chassis No. 971550)	12 K	M 12 × 1.5	5.0	36	
Shock absorber securing nut, lower	5 S	M 10	2.5—3.0	18—22	
Inner wheel bearing nut	C 35 KV	M 18 × 1	3.5	25 } [6])	
Wheel bearing locknut	C 35 KV	M 18 × 1	7.0	50 } [6])	
d - Front axle (Type 3)					
Steering wheel nut	6 G	M 18 × 1.5	5.0	36	
Screw securing drop arm to roller shaft	8 G	M 12 × 1.5	7.0	50	
Steering gear cover screws	8 G	M 8 × 1.25	2.0—2.5	14—18	
Lock nut for roller shaft adjusting screw	5 S	M 10 × 1	2.5	18	

Designation	Class	Thread	mkg	ft. lbs.
Steering gear to front axle	5 S	M 10	2.5	18
Clamp screws for upper and lower ball joints	10 K	M 10 × 40	5.5	40
up to Chassis No. 0273513 (October 1963)	10 K	M 8 × 40	3.5	25
Nuts for upper and lower ball joints	8 G	M 20 × 1.5 or M 18 × 1.5	11.0	80
Grub screw securing torsion bars	—	M 14 × 1.5	3.0	22
Grub screw securing stabilizer	—	M 14 × 1.5	4.5—5.5	32—40
Lock nut for grub screw	—	M 14 × 1.5	4.0	29
Torsion bar to axle beam screws	8 G	M 10	4.0	29
Clamp screw for stabilizer	10 K	M 10	4.0 [7]	29
Adjusting screw for stabilizer	8 G	M 8	1.0 [7]	7
Front axle securing bolts				
a - upper and lower	8 G	M 10	3.0	22
b - center	8 G	M 10	4.0	29
Shock absorber to axle beam screws	10 K	M 12 × 1.5	3.0—3.5	22—25
Shock absorber nut on torsion arm	6 G	M 10	3.0—3.5	22—25
Steering damper screw on axle	8 G	M 10	4.0—4.5	29—32
Steering damper nut on drop arm	6 G	M 10	2.5	18
Front wheel bearing nut	—	M 16 × 1.5	1.5 [3]	11
Socket head screw in nut	—	—	1.5 [3]	11
Tie rod nuts	5 S	M 10 × 1	2.5[4]	18
Steering arm on steering knuckle	10 K	M 10 × 1	5.5	40
a - Transmission and Rear Axle (Standard and Partly-synchronized Transmission) Type 1 and 2				
Transmission case nuts/bolts[8]	6 G	M 8 × 1.25	2.0	14
Ring gear screws	10 K	M 10 × 1.5	6.0	43
Drive pinion nut (Standard Transmission)	—	M 18 × 1.5	5.0[9]	36

Remarks

[7]) Tighten clamp screw to 4 mkg first, then tighten adjusting screw to 1 mkg and lock it

[8]) Tightening sequence is given on page 70

[9]) First tighten to 15 mkg (108 ft. lbs.) then back off and tighten to 5 mkg (36 ft. lbs.)

T

Designation	Class	Thread	mkg	ft. lbs.	Remarks
Drive pinion nut (Partly-synchronized transmission) up to Chassis No. 1454550/238499	—	M 22 × 1.5	11.0—12.0[10])	80—87	[10]) The nut should be tightened and not backed off [11]) Tighten first to 12 mkg then back off and finally tighten to 6 mkg
Drive pinion nut (Partly-synchronized transmission/new lock-washer) from Chassis No. 1454551/238500	—	M 22 × 1.5	8.0—9.0[10])	58—65	
Main drive shaft nut	—	M 16 × 1.5	4.0—5.0	30—36	
Selector fork clamp screw	—	M 8 × 1.25	2.5	18	
Reverse selector fork screw	—	M 7 × 12	2.0	14	
Axle shaft nut	—	M 24 × 1.5	30.0	217	
Spring plate nuts/bolts	—	M 12 × 1.5	10.0—12.0	72—87	
Transmission carrier to frame	8 G	M 18 × 1.5	23.0	166	
Oil drain plug	5 S	M 18 × 1.5	3.0—4.0	22—29	
Oil filler plug	Muk 7	M 24 × 1.5	2.0	14	
b - Transmission and Rear Axle (fully synchronised) all Types					
Final drive cover nuts	8 G	M 8 × 1.25	3.0	22	
Axle tube retainer nuts	6 G	M 8 × 1.25	2.0	14	
Ring gear screws	10 K	M 10 × 1.5	6.0	43	
Selector fork screws	C 45 KN	M 8 × 1.25	2.0	14	
Drive pinion round nut					
1 - for double ball bearing	C 35 N	M 35 × 1.5	12.0	87	
2 - for double taper roller bearing	C 35 N	M 35 × 1.5	20.0	144	
Pinion bearing retainer screws	10 K	M 10 × 1.5	5.0	36	
Pinion nut	CK 45 K	M 22 × 1.5	6.0[11])	43	
Drive shaft nut	CK 45 K/C 35	M 22 × 1.5	6.0[11])	43	
Reverse lever guide screw	8 G	M 7 × 1	2.0	14	

T

Designation	Class	Thread	mkg	ft. lbs.	Remarks
Oil drain plug Oil filler plug	Muk 7	M 24 × 1.5	2.0	14	[12]) If cotter pin holes are not in line, tighten to a maximum of 35 mkg (250 ft. lbs.). If hole is still not in line, fit a different nut.
Rear axle shaft nut (Type 1 and 3)	C 45 KN	M 24 × 1.5	30.0	—	
Nut on rear axle driven shaft (Type 2)					
up to Chassis No. 1144302	C 45 KN	M 24 × 1.5	30.0	217	
from Chassis No. 1144303	C 45 KN	M 30 × 1.5	30.0[12])	217	
Nut on driven shaft (Type 2 from August 1963)	6 S	M 30 × 1.5	15.0	108	
Spring plate screws (Type 1 and 3)	10 K	M 12 × 1.5	11.0	80	
Spring plate/reduction gear screws (Type 2)	10 K	M 12 × 1.5	10.0—12.0	72—87	
Transmission carrier on frame	8 G	M 18 × 1.5	23.0	166	
a - Brakes and Wheels (Type 1)					
Screws for bearing cover/backplate/bearing flange	10 K	M 10	5.5—6.5	40—47	
Backplate/steering knuckle screws	10 K	M 10	5.0	36	
Brake hose unions	9 S 20 K	M 10 × 1	1.5—2.5	11—14	
Brake pipe unions	9 S 20 K	M 10 × 1	1.5—2.0	11—14	
Wheel bolts	CK 35	M 12 × 1.5	10.0	72	
Stop light switch	—	M 10 × 1	1.5—2.0	11—14	
b - Brakes and Wheels (Type 2)					
Screws for bearing cover to rear brake back plate	10 K	M 10	5.5—6.0	40—43	
Brake back plate/wheel cylinder front	10 K	M 10	5.5—6.0	40—43	
Brake hose unions	9 S 20 K	M 10 × 1	1.5—2.0	10—14	
Brake pipe unions	9 S 20 K	M 10 × 1	1.5—2.0	10—14	
Wheel bolts	CK 35	M 14 × 1.5	12.0	87	
Stop light switch	—	M 10 × 1	1.5—2.0	10—14	

T

Designation	Class	Thread	mkg	ft. lbs.	Remarks
c - Brakes and wheels (Type 3)					[13]) The sub-frame securing screws must be tightened in the order shown here
Screws for bearing cover/back plate rear	10 K	M 10 × 1.5	5.5—6.5	40—47	
Wheel cylinders					
a - rear on back plate	8 G	M 8	2.5	18	
b - front on back plate/steering knuckle	8 G	M 10 × 1	4.5	32	
Disc brake caliper housing to steering knuckle	10 K	M 10	6.0	43	
Brake hose at					
a - brake pipe	—	M 10 × 1	1.5—2.0	10—14	
b - wheel cylinder	—	M 10 × 1	1.5—2.0	10—14	
c - Disc brake caliper housing	—	M 10 × 1	1.5	10	
Wheel bolts	CK 35	M 12 × 1.5	10.0	72	
from August 1965 (Four-hole wheel)	CK 35	M 14 × 1.5	13.0	94	
Stop light switch	—	M 10 × 1	1.5—2.0	10—14	
a - Body (Type 1 and 3)					
a - When installing body:					
body bolts	8 G	M 8	1.5—2.0	10—14	
body bolts	8 G	M 10	1.5—2.0	10—14	
b - When checking:					
body bolts	8 G	M 8	1.0—1.5	7—10	
body bolts	8 G	M 10	1.0—1.5	7—10	
b - Body (additional for Type 3 only)					
Sub-frame to frame (A) [13])	8 G	M 10	4.0—4.5	30—32	
Sub-frame to frame (B) [13])	8 G	M 8	2.0	14	
Body to sub-frame (tightened from luggage compartment) (C) [13])	8 G	M 10	4.0	30	
Rear engine support (D) [13])	5 S	M 8	1.0—1.5	7—10	
Body to front axle support	8 G	M 10	4.0	30	

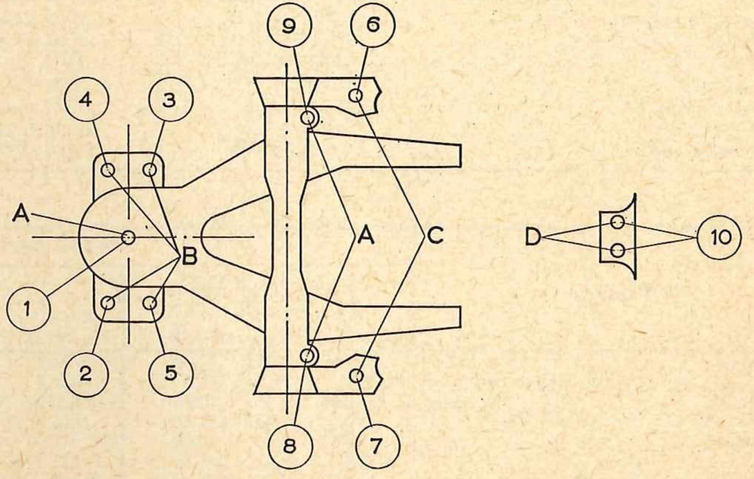

Keep an eye on the Workshop Bulletins because the values given here may be changed.

T

III. Dimensions

Type 1 and 3

Designation	11 and 15	141—144	31	34	36	Remarks
Wheelbase	2400 (94.5″)	2400 (94.5″)	2400 (94.5″)	2400 (94.5″)	2400 (94.5″)	[1]) De Luxe Sedan up to Chassis No. 1673350 Standard Sedan up to Chassis No. 4630937 Type 15 up to Chassis No. 1665424
Track, front	1290[1])/**1305** (51.4″)	1290[2])/**1305** (51.4″)	1310 (51.6″)	1310 (51.6″)	1310 (51.6″)	
rear	1250[3])/1288[4])/**1300**	1250[3])/1288[5])/**1300**	1346 (53.0″)	1346 (53.0″)	1346 (53.0″)	
Length, without bumper guards	4070 (160.2″)	4140 (163.0″)	4225 (166.3″)	4280 (168.5″)	4225 (166.3″)	[2]) Up to Chassis No. 1665212
with bumper guards	4080 (160.6″)	4140 (163.0″)	—	—	—	
Width	1540 (60.6″)	1634 (64.3″)	1605 (63.2″)	1620 (63.8″)	1605 (63.2″)	[3]) Up to Chassis No. 2528667 at unladen weight, from then on with full load
Height, unladen	1500 (59.1″)	1330 (52.3″)	1475 (58.1″)	1335 (52.6″)	1465 (57.7″)	
Ground clearance	152 (6.0″)	152 (6.0″)	149 (5.9″)	138 (5.4″)	144 (5.7″)	[4]) Up to Chassis No. 115979202
Angle of approach	27°[3])/**27°40′**	23°30′[3])/**24°10′**	24°	23°	24°	[5]) Up to Chassis No. 145979202
departure	13°30′[3])/**12°30′**	13°30′[3])/**12°30′**	17°	14°	14°	

Type 2

Designation	Up to July 1963					from August 1963					Remarks
	Up to March 1955 Models		From March 1955 Models			21, 22, 23, 28	24, 25	27	26 (except 26—200 and 26—201)	26—200/26—201	
	21, 22, 23	24, 26	21, 22, 23, 28	24, 25	26	3/4 ton and **1 ton**			3/4 ton and **1 ton**	3/4 ton and **1 ton**	
Wheelbase mm	2400 (94.5″)	2400 (94.5″)	2400 (94.5″)	2400 (94.5″)	2400 (94.5″)	2400 (94.5″)	2400 (94.5″)	2400 (94.5″)	2400 (94.5″)	2400 (94.5″)	[1]) Type 2/1500, from start of production: 1375mm
Track, front mm	1356 (53.4″)	1356 (53.4″)	1370[1]) (53.9″)	1370[1]) (53.9″)	1370[1]) (53.9″)	1375 (54.1″)	1375 (54.1″)	1375 (54.1″)	1375 (54.1″)	1375 (54.1″)	[2]) From 1 Sept 1958, approx Chassis No. 385000
rear mm	1360 (53.5″)	1360 (53.5″)	1360 (53.5″)	1360 (53.5″)	1360 (53.5″)	1360 (53.5″)	1360 (53.5″)	1360 (53.5″)	1360 (53.5″)	1360 (53.5″)	
Length, without bumper guards mm	4100 (161.4″)	4220, 4140 (166.1, 163.0″)	4190/4280[2]) (165.0/168.5″)	4220/4300[2]) (166.1/169.3″)	4190/4290[2]) (165.0/168.7″)	4280 (168.5″)	4290 (168.9″)	4280 (168.5″)	4290 (168.9″)	4290/4300 (168.9/169.3″)	
with bumper guards mm	—	—	—/4290[2]) (168.7″)	—/4300[2]) (169.3″)	—/4300[2]) (169.3″)	4290 (168.9″)	4300 (169.3″)	4290 (168.9″)	4300 (169.3″)	4300/4300 (169.3/169.3″)	
Width mm	1700 (66.9″)	1750, 1710 (68.9, 67.3″)	1725/1750[2]) (67.9/68.9″)	1800 (70.9″)	1710/1750[2]) (67.3/68.9″)	1750 (68.9″)	1800 (70.9″)	1750 (68.9″)	1750 (68.9″)	2020/1980 (79.5/77.9″)	

T

IV. Performance data

a - Maximum speeds

	Type 1									Type 2									Type 3			
	Standard Sedan	Model A Sedan	1200 A	11 and 15 1200 30 bhp	11 and 15 1200 34 bhp	11 and 15 1300 40 bhp	14 1200 30 bhp	14 1200 34 bhp	14 1300 40 bhp	2/1200 30 bhp [1]	2/1200 30 bhp [2]	2/1200 30 bhp [3]	2/1200 34 bhp [2]	2/1200 34 bhp [4]	2/1500 42 bhp/3/4 ton [2]	2/1500 42 bhp/3/4 ton [4]	2/1500 42 bhp/1 ton and 44 bhp [2]	2/1500 42 bhp/1 ton and 44 bhp [4]	1500 N + A 31, 36	1500 N + A 34	1500 S + 1600 31, 36	1500 S + 1600 34
Maximum speed ..... kph	110	110	**115**	110	115	**120**	115	120	**128**	80	90	85	95	90	105	95	**105**	**95**	**125**	132	**135**	**145**
(mph)	(68)	(68)	**(72)**	(68)	(72)	**(75)**	(72)	(75)	**(80)**	(50)	(56)	(53)	(60)	(56)	(65)	(60)	**(65)**	**(60)**	**(78)**	(83)	**(82)**	**(90)**
at an engine speed of ..... rpm	3345	3670	**3870**	3400	3870	**4010**	3600	4040	**4270**	3300	3700		3620	3430	3630	3280	**4040**	**3660**	**3950**	4140	**4250**	**4560**

[1]) up to July 1958 [2]) all other models [3]) Type 26 with cover [4]) Type 26 with cover, 26 M 200 and 26 M 201

T

b - Road speeds at maximum output rpm

		Type 1						Type 2					Type 3			Remarks
rpm		3400		3600	3400	3600	4000	3300	3600	3800		4000	3800	4200	4000	[1]) from Chassis No. 469447
Gear	approx. kph (mph)	Standard Sedan	Model A Sedan	1200 A	11, 14 and 15			2/1200		2/1500 42 bhp						
		30 bhp		34 bhp	30 bhp	34 bhp	40 bhp	30 bhp	34 bhp	¾ ton	1 ton	44 bhp	1500	1500 S	1600	
1		25 (15)	24 (15)	25 (15)	25 (15)	25 (15)	28 (17)	18 (11)	20 (12)	24 (15)	21 (13)	22.5 (14)	28 (17)	31 (19)	30 (18)	
2		42 (26)	44 (27)	46 (28)	46 (28)	46 (28)	52 (32)	35/34[1]) (21)	38 (24)	44 (27)	39 (24)	41.5 (26)	52 (32)	58 (36)	55 (34)	
3		72 (45)	68.5 (43)	72 (45)	73 (45)	72 (45)	81 (50)	53/52[1]) (33)	64 (40)	74 (46)	67 (42)	70 (44)	81 (50)	90 (56)	86 (53)	
4		112 (69)	102 (63)	107 (66)	110 (68)	107 (66)	120 (74)	80 (50)	94 (58)	110 (68)	99 (61)	104 (64)	120 (74)	133 (82)	127 (78)	
Reverse		13.5 (8)	23 (14)	25 (15)	19 (12)	25 (15)	27.5 (17)	14 (9)	20 (12)	23 (14)	21 (13)	22 (14)	28 (17)	30 (19)	29 (18)	

T

c - Hill climbing ability on good roads

Type 1, 31 and 34 with two occupants
Type 36 with half maximum load
Type 2 fully loaded

		Type 1											Type 2			Type 3								Remarks
Gear	approx.	Standard Sedan	Model A Sedan	1200 A	11/1200 30 bhp	11/1200 34 bhp	11/1300 40 bhp	14 and 15 1200 30 bhp	14 and 15 1200 34 bhp	14 and 15/1300 40 bhp	2/1200 30 bhp	2/1200 34 bhp	2/1500 42 bhp ¼ ton	2/1500 42 bhp 1 ton	2/1500 42 bhp 44 bhp	1500 31	1500 34	1500 36 375 kg	1500 36 465 kg	1600 31	1600 34	1600 36 375 kg	1600 36 465 kg	
1	%	37.0	40.0	43.5	37.0	43.5	44.5	34.0	39.0	42.0	24/25[1])	36.0	28.0	26.0	28.0	45.5	45.5	40.0	38.0	46.0	46.0	41.5	39.5	[1]) from Chassis No. 469447
2	%	20.5	20.5	22.5	18.5	22.5	23.0	17.0	20.5	22.0	12/13[1])	13.5	14.5	13.5	14.5	23.5	23.5	20.0	19.0	24.0	24.0	21.5	20.5	
3	%	11.0	12.0	13.5	11.0	13.5	13.5	10.5	12.0	13.0	7.5	7.0	7.5	7.0	8.0	14.0	14.0	12.0	11.5	14.0	14.0	12.5	12.0	
4	%	6.0	6.5	7.5	6.0	7.5	8.0	5.5	6.5	7.5	4.0	4.0	4.0	4.0	4.5	7.5	8.0	6.5	6.0	8.0	8.5	7.5	7.0	

d - Acceleration times (through the gears)

	Type 1									Type 3						Remarks
	30 bhp			34 bhp				40 bhp		1500		1500 S		1600		
	Standard and A Model	11/1200	14and15 1200	1200 A	11/1200	14/1200	15/1200	11and 15/1300	14/1300	31 and 36	34	31 and 36	34	31 and 36	34	
Approx. seconds from 0 to 80 kph (0 to 50 mph)	21	21	22.5	18	18	18	18	14	14	15	14	13	12	12.5	11.5	
from 0 to 100 kph (0 to 62 mph)	50	—	—	37	37	30	37	26	25	25	24	21	20	20.0	19.0	
from 80 to 100 kph (50 to 62 mph)	29	—	—	19	19	12	19	12	11	10	10	8	8	7.5	7.5	

T

V. Capacities

Designation	Type 1	Type 2	Type 3
Fuel tank	40 liters, including 5 liters reserve (10.5 US gals., 8.8 Imp. gals.)		
Crankcase	2.5 liters (5.3 US pints, 4.4 Imp. pints) Refilling quantity 2.5 liters.		
Transmission and final drive	3.0 liters (6.3 US pints, 5.5 Imp. pints) Refilling quantity 2.5 liters[1])		
Reduction gears	—	0.25 liter each (0.5 US pint, 0.4 Imp. pint)	—
Steering:			
a - Sector steering	0.125 liter (0.26 US pint, 0.22 Imp. pint)	—	—
b - Roller steering	0.16 liter[2]) (0.4 US pint, 0.35 Imp. pint)	—	0.16 l[2])
c - Ross steering	—	0.25 liter (0.5 US pint, 0.4 Imp. pint)	—
Brakes	0.25 liter (0.5 US pint, 0.4 Imp. pint)	0.30 liter (0.6 US pint, 0.5 Imp. pint)	0,25 l
Oil bath air cleaner (fill up to mark)	0.25 liter[3]) (0.5 US pint 0.4 Imp. pint)	0.30 liter[4]) (0.6 US pint, 0.5 Imp. pint)	0,40 l[5]) (0.84 US pint, 0.7 Imp. pint)

[1]) For Standard and Partly-synchronized Transmission: capacity 2,5 l, refill 2,0 l
[2]) Only up to November 1964. Since then maintenance free, filled with liquid grease
[3]) Type 14/1300: 0.30 liter [4]) Typ 2/1200: 0.25 liter [5]) Single-carburetor engine: 0.25 liter

VI. Consumption figures

Type and Model		Fuel[1])	Oil
Type 1 all Models	30 bhp	7.3 liters per 100 km 38.7 miles per Imp gall. 32.2 miles per US gall.	0.3—1.0 liter per 1000 km .9—2.8 Imp pints per 1000 miles 1 —3.4 US pints per 1000 miles
	34 bhp	**7.5 liters per 100 km** 37.7 miles per Imp gall. 30.4 miles per US gall.	
11 and 15/1300	**40 bhp**	**8.2 l/100 km** 34.5 m/Ig 28.6 m/USg	
14/1300		**8.0 l/100 km** 35.0 m/Ig 29.0 m/USg	
Type 2 Model 21, 22, 23, 27 and 28	30 bhp	9.5 liters per 100 km 29.7 miles per Imp gall. 24.7 miles per US gall.	0.5—1.4 liter per 1000 km 1.4—4.0 Imp pints per 1000 miles 1.7—4.8 US pints per 1000 miles
Model 26 without cover		10.0 liters per 100 km 28.2 miles per Imp gall. 23.5 miles per US gall.	
Model 26 with cover		10.4 liters per 100 km 27.2 miles per Imp gall. 22.6 miles per US gall.	
Model 21 M 222, 26 with cover 26 M 222 and 26 M 201	34 bhp	9.2 liters per 100 km 30.7 miles per Imp gall. 25.6 miles per US gall.	
	42 bhp ¾ ton	9.7 liters per 100 km 29.1 miles per Imp gall. 24.2 miles per US gall.	
	42 bhp 1 ton	10.0 liters per 100 km 28.2 miles per Imp gall. 23.5 miles per US gall.	
	44 bhp		

T

Consumption figures (contd.)

Type and Model			Fuel[1])	Oil
all other Models	34 bhp		9.2 liters per 100 km 30.7 miles per Imp gall. 25.6 miles per US gall.	0.5—1.4 liter per 1000 km 1.4—4.0 Imp pints per 1000 miles 1.7—4.8 US pints per 1000 miles
	42 bhp	3/4 ton	9.5 liters per 100 km 29.7 miles per Imp gall. 24.7 miles per US gall.	
		1 ton	**9.7 liters per 100 km** 29.1 miles per Imp gall. 24.2 miles per US gall.	
		44 bhp		
Type 3				
31 and 36/1500	**Single carburetor**		**8.4 liters per 100 km** 33.6 miles per Imp gall. 28.0 miles per US gall.	0.5—1.0 liter per 1000 km 1.4—2.8 Imp pints per 1000 miles 1.7—3.4 US pints per 1000 miles
	Twin carburetor		7.8 liters per 100 km 36.2 miles per Imp gall. 30.0 miles per US gall.	
34/1500	Single carburetor		8.3 liters per 100 km 34.0 miles per Imp gall. 28.4 miles per US gall.	
	Twin carburetor		8.0 liters per 100 km 35.3 miles per Imp gall. 28.3 miles per US gall.	
31 and 36/1600			**8.3 liters per 100 km** 34.0 miles per Imp gall. 28.4 miles per US gall.	0.5—1.4 liter per 1000 km 1.4—4.0 Imp pints per 1000 miles 1.7—4.8 US pints per 1000 miles
34/1600			**8.6 liters per 100 km** 32.8 miles per Imp gall. 27.3 miles per US gall.	

Remarks
[1]) In accordance with German regulations (DIN 70030). Measured consumption plus 10%, vehicle with half maximum load at a constant 3/4 of maximum speed on level road.

T

Always refer to the Workshop Bulletins because the values in this booklet may change.

© 1966 VOLKSWAGENWERK AG
All rights reserved
Specifications subject to change without notice

530.066.20 Printed in Germany 4.66

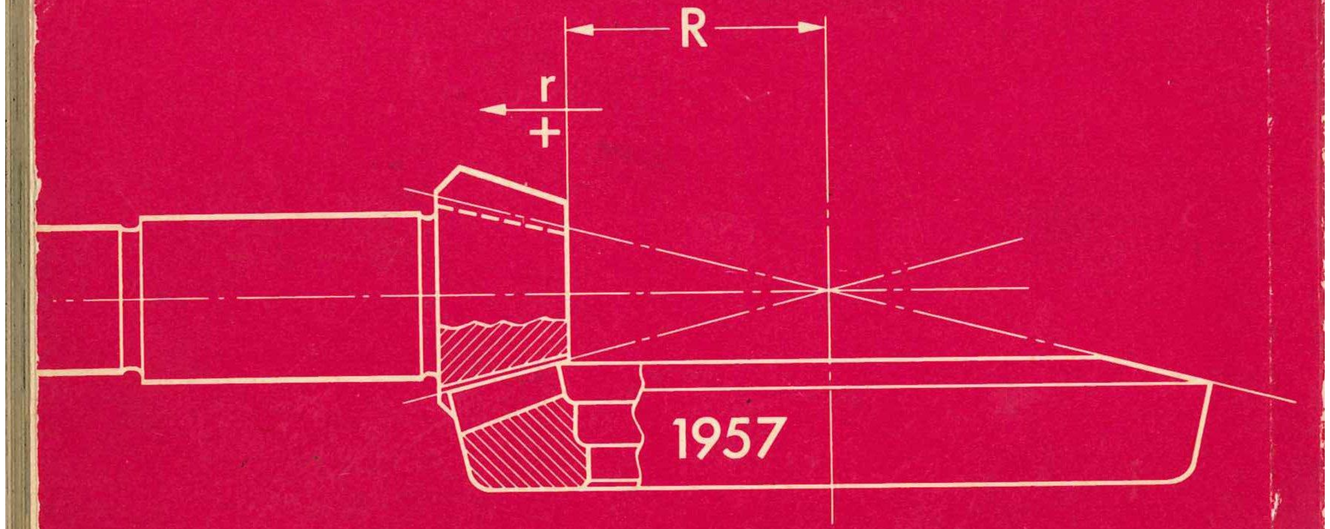

January 1966